STR-K660P

SERVICE MANUAL

US Model
E Model

Ver 1.0 2004.02

• STR-K660P is the tuner and the amplifier section in HT-DDW660.

Manufactured under license from Dolby Laboratories.
"Dolby", "Pro Logic" and the double-D symbol are trademarks of Dolby Laboratories.
"DTS" and "DTS Digital Surround" are registered trademarks of Digital Theater Systems, Inc.

SPECIFICATIONS

AUDIO POWER SPECIFICATIONS

POWER OUTPUT AND TOTAL HARMONIC DISTORTION:
(Models of area code U only)

With 6 ohm loads, both channels driven, from 120 – 20,000 Hz; rated 50 watts per channel minimum RMS power, with no more than 0.7% total harmonic distortion from 250 milliwatts to rated output.

Amplifier section

Power Output[1)]
Models of area code U
(6 ohms 1 kHz, THD 10%)
FRONT[2)]: 70 W/ch
CENTER[2)]: 70 W
SURR[2)]: 70 W/ch
(6 ohms 100 Hz, THD 10%)
SUB WOOFER[2)]: 70 W

Models of area code SP, MX, E51
(6 ohms 1 kHz, THD 0.7%)
FRONT[2)]: 50 W/ch
CENTER[2)]: 50 W
SURR[2)]: 50 W/ch
(6 ohms 100 Hz, THD 0.7%)
SUB WOOFER[2)]: 50 W

(6 ohms 1 kHz, THD 10%)
FRONT[2)]: 70 W/ch
CENTER[2)]: 70 W
SURR[2)]: 70 W/ch
(6 ohms 100 Hz, THD 10%)
SUB WOOFER[2)]: 70 W

1) Measured under the following conditions:

Area code	Power requirements
U, MX	120 V AC, 60 Hz
SP	230 V AC, 50 Hz
E51	240 V AC, 50 Hz

2) Depending on the sound field settings and the source, there may be no sound output.

Inputs (Analog)

DVD, VIDEO	Sensitivity: 800 mV Impedance: 50 kiloohms

— Continued on next page —

FM STEREO FM-AM RECEIVER

9-877-522-01
2004B1678-1
© 2004.02

Sony Corporation
Home Audio Company
Published by Sony Engineering Corporation

SONY®

Inputs (Digital)

DVD (Coaxial)	Sensitivity: – Impedance: 75 ohms
VIDEO (Optical)	Sensitivity: – Impedance: –

Reproduction frequency range:
28 – 20,000 Hz

Tone

Gain levels	±6 dB, 1 dB step

FM tuner section

Tuning range	87.5 - 108.0 MHz
Antenna	FM wire antenna
Antenna terminals	75 ohms, unbalanced
Intermediate Frequency	10.7 MHz

AM tuner section

Tuning range	
Models of area code U	
With 10-kHz tuning scale:	530 - 1,710 kHz[3)]
With 9-kHz tuning scale:	531 - 1,710 kHz[3)]
Models of area code E51	
With 10-kHz tuning scale:	530 - 1,610 kHz[3)]
With 9-kHz tuning scale:	531 - 1,602 kHz[3)]
Models of area code SP	
With 9-kHz tuning scale:	531 - 1,602 kHz
Models of area code MX	
With 10-kHz tuning scale:	530 - 1,610 kHz
Antenna	Loop antenna
Intermediate Frequency	450 kHz

3) You can change the AM tuning scale to 9 kHz or 10 kHz. After tuning in any AM station, turn off the receiver. While holding down PRESET TUNING + or TUNING +, press I/⏻. All preset stations will be erased when you change the tuning scale. To reset the scale to 10 kHz (or 9 kHz), repeat the procedure.

General

Power requirements

Area code	Power requirements
U, MX	120 V AC, 60 Hz
SP	220 – 230 V AC, 50/60 Hz
E51	120/220/240 V AC, 50/60 Hz

Power consumption

Area code	Power consumption
U	150 W
SP, E51, MX	150 W

Power consumption (during standby mode)
0.3 W

Dimensions (w/h/d) (Approx.)
430 × 145 × 301.5 mm
(17 × 5 6/8 × 11 7/8 inches)
including projecting parts
and controls

Mass (Approx.) 6.5 kg (14 lb 6 oz)

• Abbreviation
E51 : Chilean and Peruvian models
MX : Mexican model
SP : Singapore model
U : US model

Design and specifications are subject to change without notice.

SAFETY CHECK-OUT

After correcting the original service problem, perform the following safety checks before releasing the set to the customer: Check the antenna terminals, metal trim, "metallized" knobs, screws, and all other exposed metal parts for AC leakage. Check leakage as described below.

LEAKAGE

The AC leakage from any exposed metal part to earth ground and from all exposed metal parts to any exposed metal part having a return to chassis, must not exceed 0.5 mA (500 microamperes). Leakage current can be measured by any one of three methods.

1. A commercial leakage tester, such as the Simpson 229 or RCA WT-540A. Follow the manufacturers' instructions to use these instruments.

2. A battery-operated AC milliammeter. The Data Precision 245 digital multimeter is suitable for this job.

3. Measuring the voltage drop across a resistor by means of a VOM or battery-operated AC voltmeter. The "limit" indication is 0.75 V, so analog meters must have an accurate low-voltage scale. The Simpson 250 and Sanwa SH-63Trd are examples of a passive VOM that is suitable. Nearly all battery operated digital multimeters that have a 2V AC range are suitable. (See Fig. A)

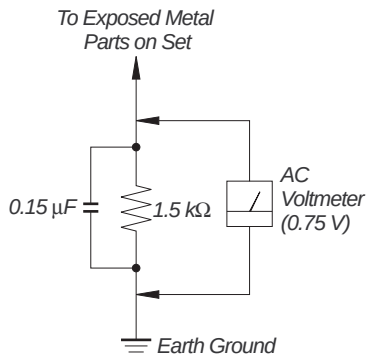

Fig. A. Using an AC voltmeter to check AC leakage.

SAFETY-RELATED COMPONENT WARNING!!

COMPONENTS IDENTIFIED BY MARK ⚠ OR DOTTED LINE WITH MARK ⚠ ON THE SCHEMATIC DIAGRAMS AND IN THE PARTS LIST ARE CRITICAL TO SAFE OPERATION. REPLACE THESE COMPONENTS WITH SONY PARTS WHOSE PART NUMBERS APPEAR AS SHOWN IN THIS MANUAL OR IN SUPPLEMENTS PUBLISHED BY SONY.

Notes on chip component replacement

- Never reuse a disconnected chip component.
- Notice that the minus side of a tantalum capacitor may be damaged by heat.

Unleaded solder

Boards requiring use of unleaded solder are printed with the lead-free mark (LF) indicating the solder contains no lead.
(Caution: Some printed circuit boards may not come printed with the lead free mark due to their particular size.)

: LEAD FREE MARK

Unleaded solder has the following characteristics.

- Unleaded solder melts at a temperature about 40°C higher than ordinary solder.
  Ordinary soldering irons can be used but the iron tip has to be applied to the solder joint for a slightly longer time.
  Soldering irons using a temperature regulator should be set to about 350°C.
  Caution: The printed pattern (copper foil) may peel away if the heated tip is applied for too long, so be careful!
- Strong viscosity
  Unleaded solder is more viscous (sticky, less prone to flow) than ordinary solder so use caution not to let solder bridges occur such as on IC pins, etc.
- Usable with ordinary solder
  It is best to use only unleaded solder but unleaded solder may also be added to ordinary solder.

MODEL IDENTIFICATION
– BACK PANEL –

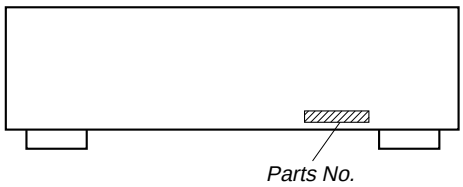

MODEL	PARTS No.
US model	4-252-087-0☐
E51 model	4-252-087-8☐
Mexican model	4-252-087-9☐
Singapore model	4-252-088-5☐

- Abbreviation
  E51 : Chilean and Perurian models.

TABLE OF CONTENTS

1. GENERAL ····· 5 ·····

2. TEST MODE ····· 9

3. DIAGRAMS
3-1. Circuit Board Location ····· 10
3-2. Block Diagrams – MAIN Section – ····· 12
– DISPLAY/POWER Section – ····· 13
3-3. Printed Wiring Board
– DIGITAL Board (Side A) – ····· 14
3-4. Printed Wiring Board
– DIGITAL Board (Side B) – ····· 15
3-5. Schematic Diagram – DIGITAL Section (1/2) – ····· 16
3-6. Schematic Diagram – DIGITAL Section (2/2) – ····· 17
3-7. Printed Wiring Board – MAIN Section – ····· 18
3-8. Schematic Diagram – MAIN Section (1/2) – ····· 19
3-9. Schematic Diagram – MAIN Section (2/2) – ····· 20
3-10. Printed Wiring Board – SUB WOOFER Board – ····· 21
3-11. Schematic Diagram – SUB WOOFER Board – ····· 21
3-12. Printed Wiring Board – POWER Section – ····· 22
3-13. Schematic Diagram – POWER Section – ····· 23
3-14. Printed Wiring Board – FRONT PANEL Section – ··· 24
3-15. Schematic Diagram – FRONT PANEL Section – ····· 25
3-16. IC Pin Function Descriptions ····· 29

4. EXPLODED VIEWS
4-1. Front Panel Section ····· 31
4-2. Chassis Section ····· 32

5. ELECTRICAL PARTS LIST ····· 33

SECTION 1
GENERAL

This section is extracted from instruction manual.

ALPHABETICAL ORDER

A - L

A.F.D. (button/indicator) 7 (17, 18, 19, 30)
AM 22 (13, 14)
DIMMER 3 (15)
DISPLAY 2 (15, 31)
Display 5 (15)
DVD 24 (13)
ENTER 11 (10, 24)
FM 23 (13, 14)
FM MODE 20 (13)
Input buttons 16 (13, 20, 23, 24)
INPUT MODE 12 (20)
R (receptor) 4 (25, 31)

M - Z

MAIN MENU 15 (11, 20, 22, 24)
MASTER VOLUME –/+ 10 (12, 13, 30)
MEMORY 19 (14)
MOVIE (button/indicator) 8 (18, 30)
MUSIC (button/indicator) 9 (19, 30)
PHONES (jack) 21 (13, 16, 30)
PRESET TUNING –/+ 17 (14, 33)
TUNING –/+ 18 (13, 33)
VIDEO 25 (13)

NUMBERS AND SYMBOLS

2CH (button/indicator) 6 (17, 19, 21)
+/– 13 (11, 20, 22, 24)
</> 14 (11, 20, 22, 24)
I/⏻ (power) 1 (10, 12, 33)

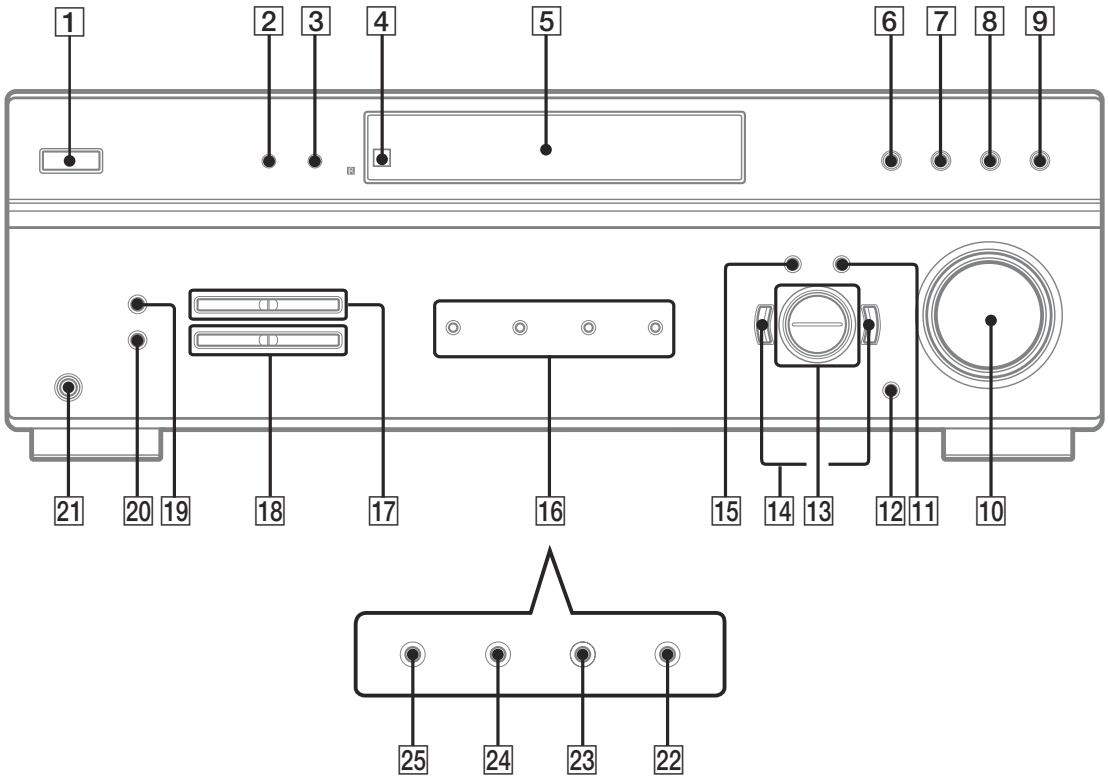

Remote button description

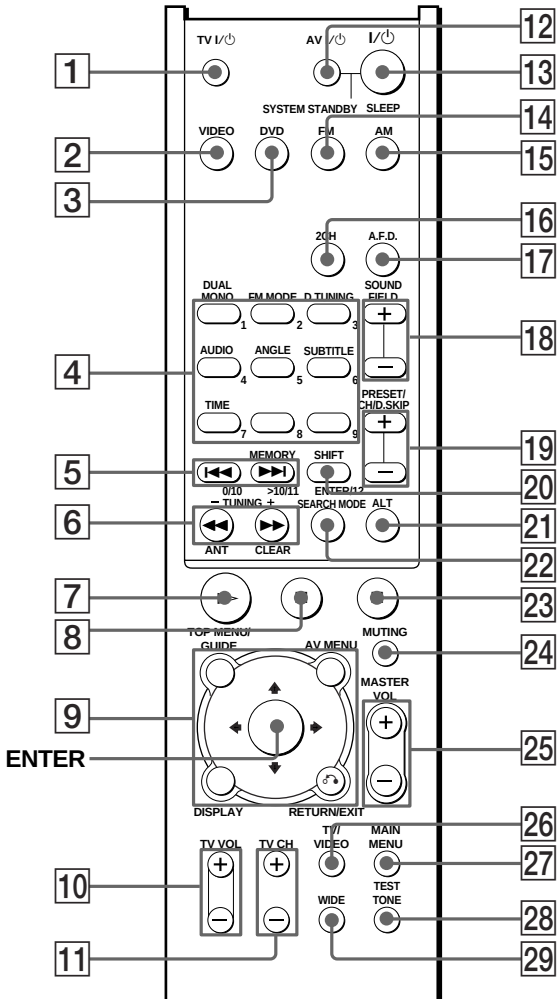

The tables below show the settings of each button.

Remote Button	Operations	Function
A.F.D. 17	Receiver	Selects the decoding mode for audio sound.
ALT 21	Remote	When ALT button lights up, it changes the remote key function to activate those buttons with orange printing.
AM 15	Receiver	To select the AM band.
ANGLE 4	DVD player	Selects viewing angle or changes the angles.
ANT 6	VCR	Selects output signal from the antenna terminal: TV signal or VCR program.
AUDIO 4	VCR/ DVD player	Changes the sound to Multiplex or Bilingual.
AV MENU 9	VCR/ DVD player	Displays menu.
AV I/⏻ 12	VCR/ DVD player	Turns the audio and video components on or off.
CLEAR 6	DVD player	Press if you make a mistake when you press the numeric button or press to return to continuous play etc.
DISPLAY 9	VCR/ DVD player	Selects information displayed on the TV screen.
D.TUNING 4	Receiver	Enters direct tuning mode.
DUAL MONO 4	Receiver	Selects the language you want during digital broadcast.
DVD 3	Receiver	To watch DVD.

Remote Button	Operations	Function
ENTER 9	Receiver/ VCR/ DVD player	Enters the selection.
ENTER/12 20	VCR/ DVD player	Enters the selection.
FM 14	Receiver	To select the FM band.
FM MODE 4	Receiver	Selects FM monaural or stereo reception.
MAIN MENU 27	Receiver	Selects the menu of the receiver.
MASTER VOL +/– 25	Receiver	Adjusts the master volume of the receiver.
MEMORY 5	Receiver	Stores the radio stations.
MUTING 24	Receiver	Mutes the sound from the receiver.
PRESET/ CH/D.SKIP +/– 19	Receiver	Selects preset stations.
	VCR	Selects preset channel.
	DVD player	Skips discs (multi-disc changer only).
RETURN/ EXIT/↶ 9	DVD player	Returns to the previous menu or exits the menu.
SEARCH MODE 22	DVD player	Selects searching mode. Press to select the unit for search (track, index, etc.)

Remote Button	Operations	Function
SHIFT 20	Receiver	Selects a memory page for presetting radio stations or tuning to preset stations.
SLEEP 13	Receiver	Activates the sleep function and the duration which the receiver turns off automatically.
SOUND FIELD +/– 18	Receiver	Selects sound fields.
SUBTITLE 4	DVD player	Changes the subtitles.
SYSTEM STANDBY (Press AV I/⏻ 12 and I/⏻ 13 at the same time)	Receiver/ TV/VCR/ DVD player	Turns off the receiver and other Sony audio/ video components.
TEST TONE 28	Receiver	Outputs test tone.
TIME 4	DVD player	Shows the time or displays the playing time of disc, etc.
TOP MENU/ GUIDE 9	DVD player	Displays DVD title.
TUNING +/– 6	Receiver	Scans radio stations.
TV CH +/– 11	TV	Selects preset TV channels.

Remote Button	Operations	Function
TV/VIDEO 26	TV	Selects input signal: TV input or video input.
TV VOL +/– 10	TV	Adjusts the volume of the TV.
TV I/⏻ 1	TV	Turns the TV on or off.
VIDEO 2	Receiver	To watch VCR.
WIDE 29	TV	Selects the wide picture mode.
I/⏻ 13	Receiver	Turns the receiver on or off.
2CH 16	Receiver	Selects 2CH STEREO mode.
↑/↓ 9	Receiver	Selects a menu item.
←/→ 9	Receiver	Makes adjustment or change the setting.
↑/↓/←/→ 9	VCR/ DVD player	Selects a menu item. Press to enter the selection.
1-9 4 and 0/10 5	Receiver	Use with SHIFT to preset radio station or tuning to preset stations and with D.TUNING for direct tuning.
	DVD player	Selects track numbers. 0/10 selects track 10.
	VCR	Selects channel numbers.
>10/11 5	VCR	Selects channel 11.

Remote Button	Operations	Function
⏮/⏭ 5	VCR/ DVD player	Skips tracks.
◀◀/▶▶ 6	DVD player	Searches tracks in the forward or backward direction.
	VCR	Fastforwards or rewinds.
▷ 7	VCR/ DVD player	Starts playback.
❚❚ 8	VCR/ DVD player	Pauses playback or record. (Also starts recording with components in recording standby.)
■ 23	VCR/ DVD player	Stops playback.

Notes

- The above explanation is intended to serve as an example only. Therefore, depending on the component the above operation may not be possible or may operate differently than described.
- When you press input buttons (VIDEO or DVD), the input mode of the TV might not switch to the corresponding input mode that you want. In this case, press the TV/VIDEO button to swtich the input mode of the TV.
- To activate the buttons with orange printing, press ALT first before pressing the buttons.

SECTION 2
TEST MODE

FACTORY PRESET MODE

- All preset contents are reset to the default setting.
- Procedure:
  While depressing the MAIN MENU and the PRESET TUNING– buttons simultaneously, press the I/⏻ button again. The message "FACTORY" appears and the present contents are reset to the default values.

AM CHANNEL STEP 9 KHZ/10 KHZ SELECTION MODE

- Either the 9 kHz step or 10 kHz step can be selected for the AM channel step.
- Procedure:
  Set the FUNCTION to AM. Turn off the main power.
  While depressing the TUNING+ button or the PRESET TUNING + button, press the I/⏻ button to turn on the main power. Either the message "9 k STEP" or "10 k STEP" appears. Select the desired step.

FLUORESCENT INDICATOR TUBE TEST MODE

- All fluorescent segments are tested. When this test is activated, all segments turn on at the same time, then each segment turns on one after another.
- Procedure:
  While depressing the MOVIE and the > buttons simultaneously, press the I/⏻ button to turn on the main power.

1. All segments turn on.

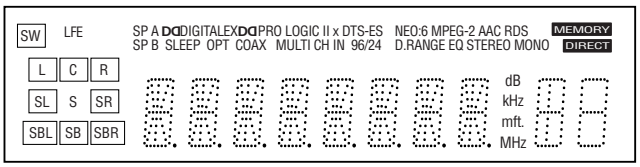

2CH , A. F. D , MOVIE and MUSIC LED turn on.

2. Press the VIDEO button, confirm display.

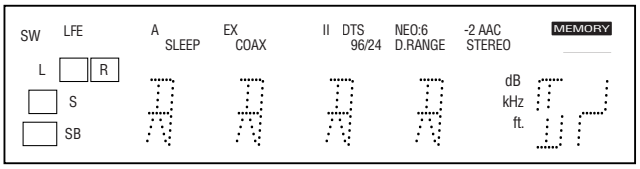

A.F.D. and MUSIC LED turn on.

3. Press the VIDEO button, confirm display

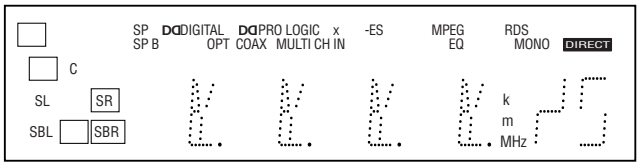

2CH and MOVIE LED turn on.

4. Press the VIDEO button, All segments and all LEDS turn off.

5. Every pressing of the VIDEO button turns on each segment and LED one after another in the same order.

SOUND FIELD CLEAR MODE

- The preset sound field is cleared when this mode is activated. Use this mode before returning the product to clients upon completion of repair.
- Procedure:
  While depressing the 2CH button, press the I/⏻ button to turn on the main power.
  The message "SF. CLR." appears and initialization is performed.

SOFTWARE VERSION DISPLAY MODE

- The software version is displayed.
- Procedure:
  While depressing the FM MODE and the DISPLAY buttons simultaneously, press the I/⏻ button to turn on the main power. The model name, destination and the software version are displayed.

KEY CHECK MODE

- Button check
- Procedure:
  While depressing the A.F.D. and the AM buttons simultaneously, press the power I/⏻ button to turn on the main power.
  "REST 23" appears.
  Every pressing of any button other than I/⏻ counts down the buttons. The buttons which are already counted once are not counted again. When all buttons are pressed "REST 00" appears.

COMMAND MODE SELECTION MODE

- The command mode (AV1 or AV2) of the remote commander can be selected.
- Procedure:

1. While depressing the ENTER button, press the I/⏻ button to turn on the main power.
2. The message "C.MODE.AV 1" or "C.MODE.AV 2" appears for a moment. Select the desired mode.

SECTION 3
DIAGRAMS

3-1. CIRCUIT BOARD LOCATION

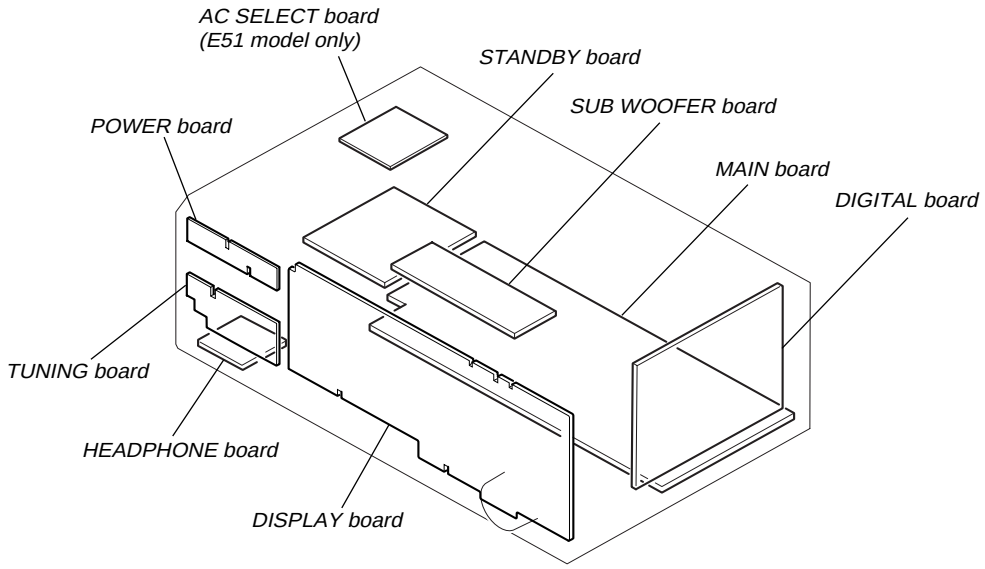

THIS NOTE IS COMMON FOR PRINTED WIRING BOARDS AND SCHEMATIC DIAGRAMS.
(In addition to this necessary note is printed in each block.)

For schematic diagrams.
Note:
- All capacitors are in µF unless otherwise noted. p : µµF 50 WV or less are not indicated except for electrolytics and tantalums.
- All resistors are in Ω and 1/4 W or less unless otherwise specified.
- % : indicates tolerance.
- △ : internal component.
- : nonflammable resistor.
- : fusible resistor.
- : panel designation.

Note: The components identified by mark ⚠ or dotted line with mark ⚠ are critical for safety.
Replace only with part number specified.

- : B+ Line.
- : B– Line.
- Voltages and waveforms are dc with respect to ground under no-signal (detuned) conditions.
  No mark : FM
- Voltages are taken with a VOM (Input impedance 10 MΩ). Voltage variations may be noted due to normal production tolerances.
- Waveforms are taken with a oscilloscope.
- Circled numbers refer to waveforms.
- Signal path.
  : FM
  : ANALOG INPUT
  : DIGITAL INPUT
- Abbreviation
  E51 : Chilean and Peruvian models
  MX : Mexican model
  SP : Singapore model

For printed wiring boards.
Note:
- : parts extracted from the component side.
- ○ : Through hole.
- △ : internal component.
- : Pattern from the side which enables seeing.

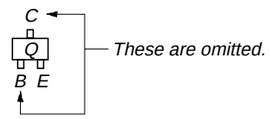

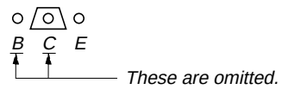

Caution:	
Pattern face side: (Side A)	Parts on the pattern face side seen from the pattern face are indicated.
Parts face side: (Side B)	Parts on the parts face side seen from the parts face are indicated.

• Waveforms

DIGITAL Board

① IC1101 ㉑ (XOUT)

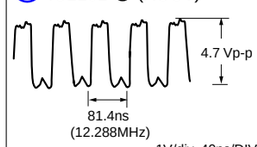

② IC1201 ⑨ (MCLK1)

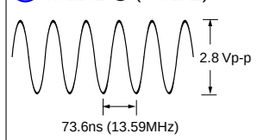

③ IC1601 ㊸ (XI)

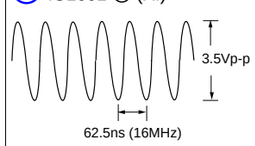

11

3-2. BLOCK DIAGRAMS – MAIN SECTION –

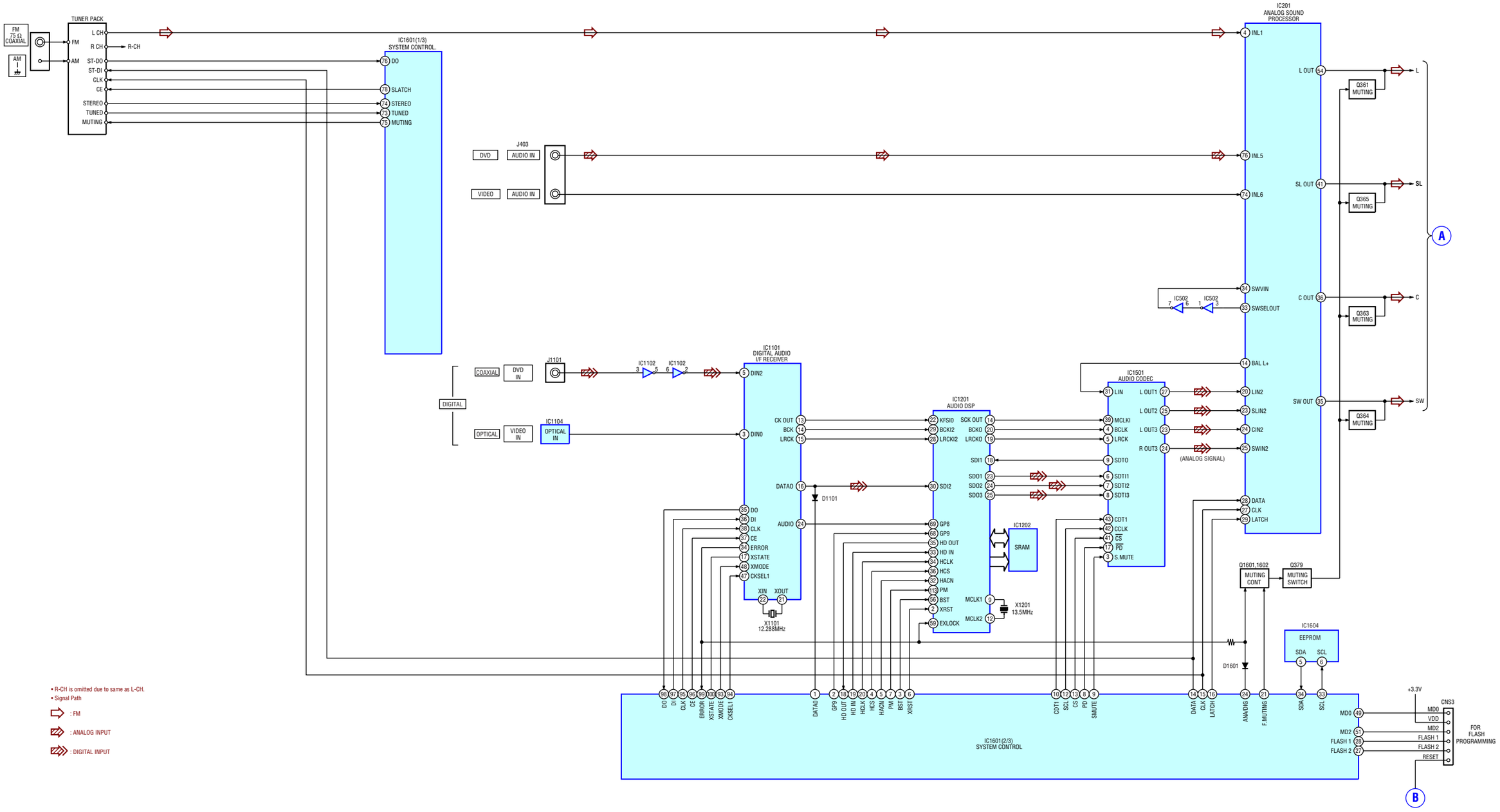

– DISPLAY/POWER SECTION –

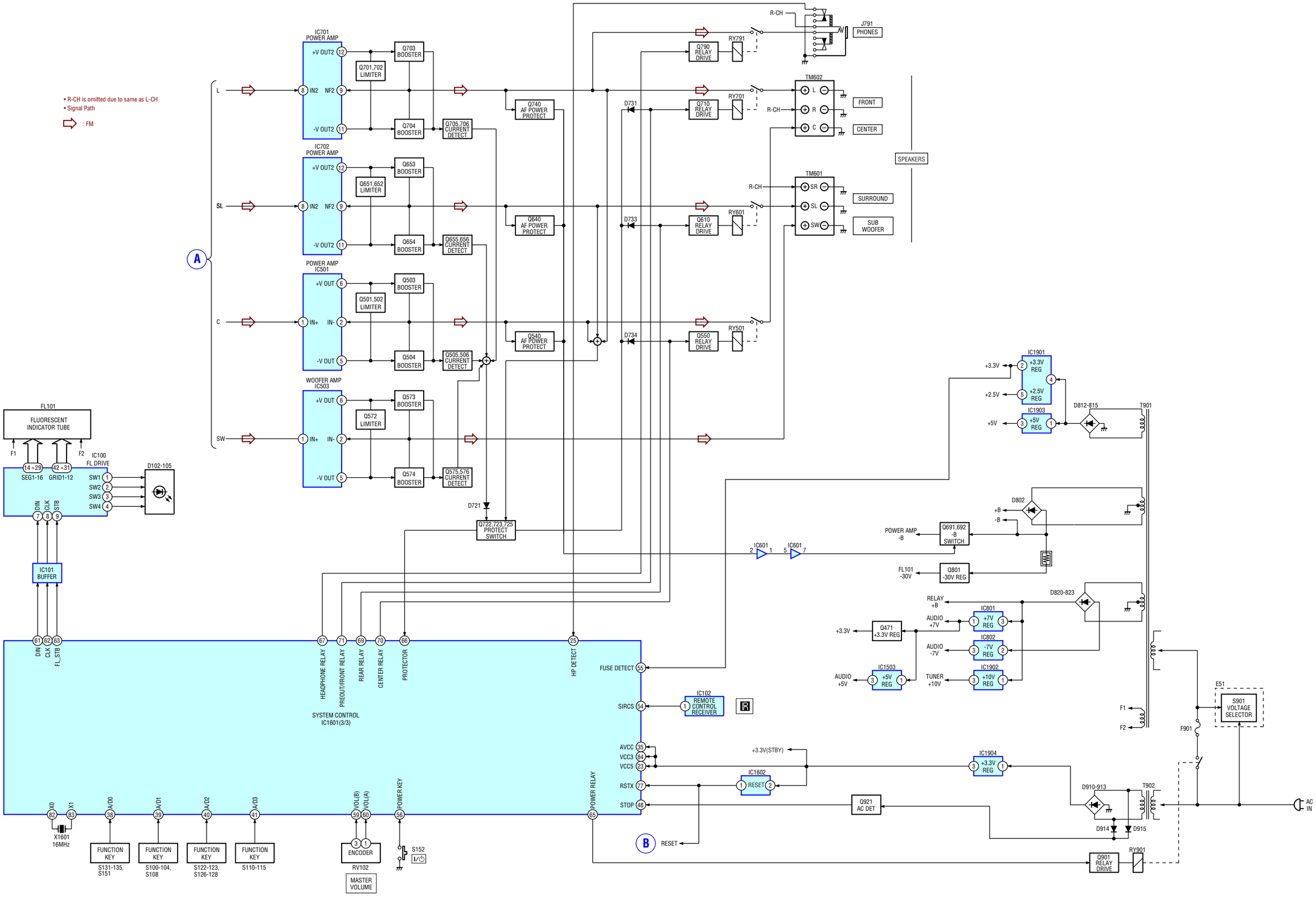

3-3. PRINTED WIRING BOARD – DIGITAL BOARD (SIDE A) –

• See page 10 for Circuit Boards Location. • : Uses unleaded solder.

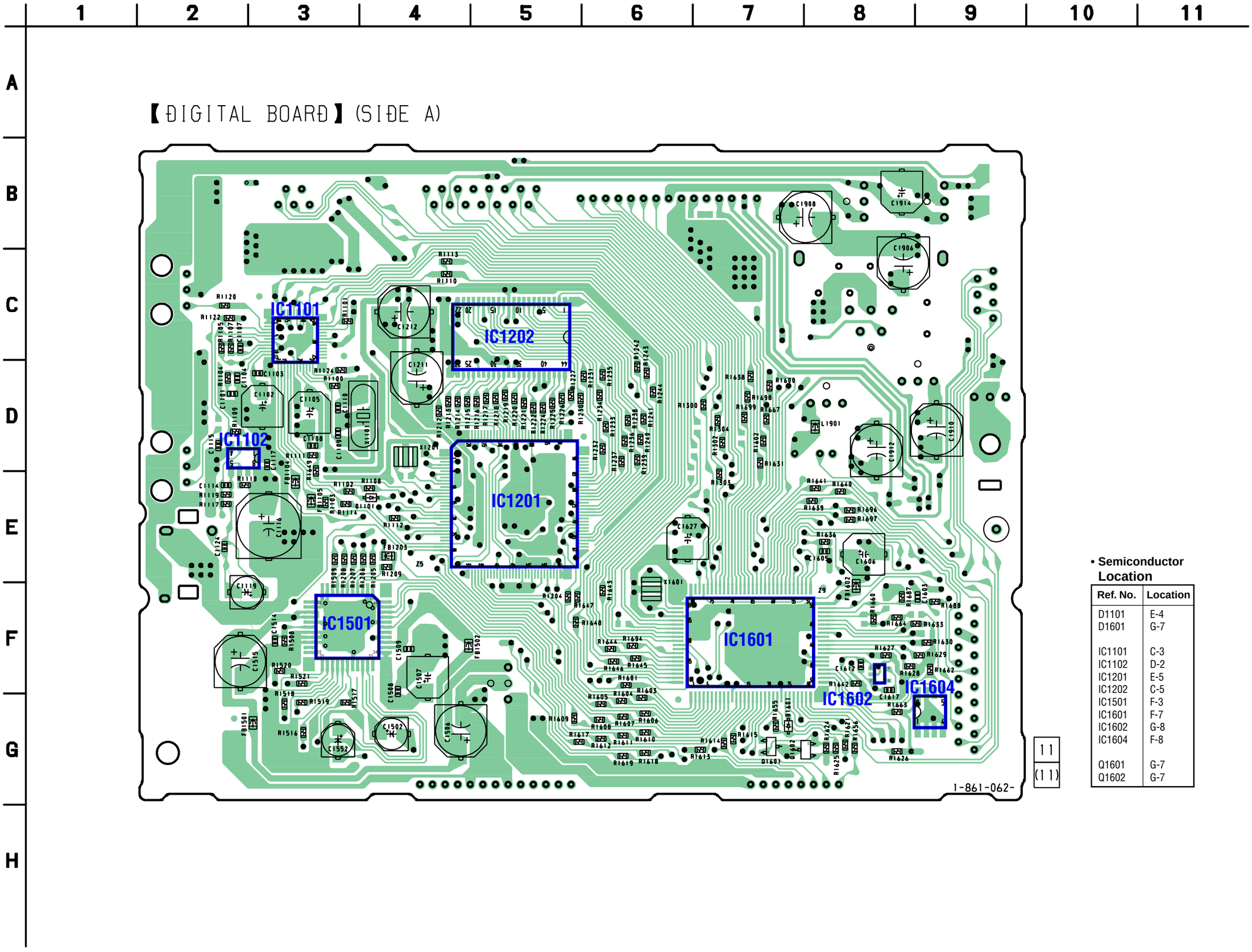

• Semiconductor Location

Ref. No.	Location
D1101	E-4
D1601	G-7
IC1101	C-3
IC1102	D-2
IC1201	E-5
IC1202	C-5
IC1501	F-3
IC1601	F-7
IC1602	G-8
IC1604	F-8
Q1601	G-7
Q1602	G-7

3-4. PRINTED WIRING BOARD – DIGITAL BOARD (SIDE B) –

• See page 10 for Circuit Boards Location. • : Uses unleaded solder.

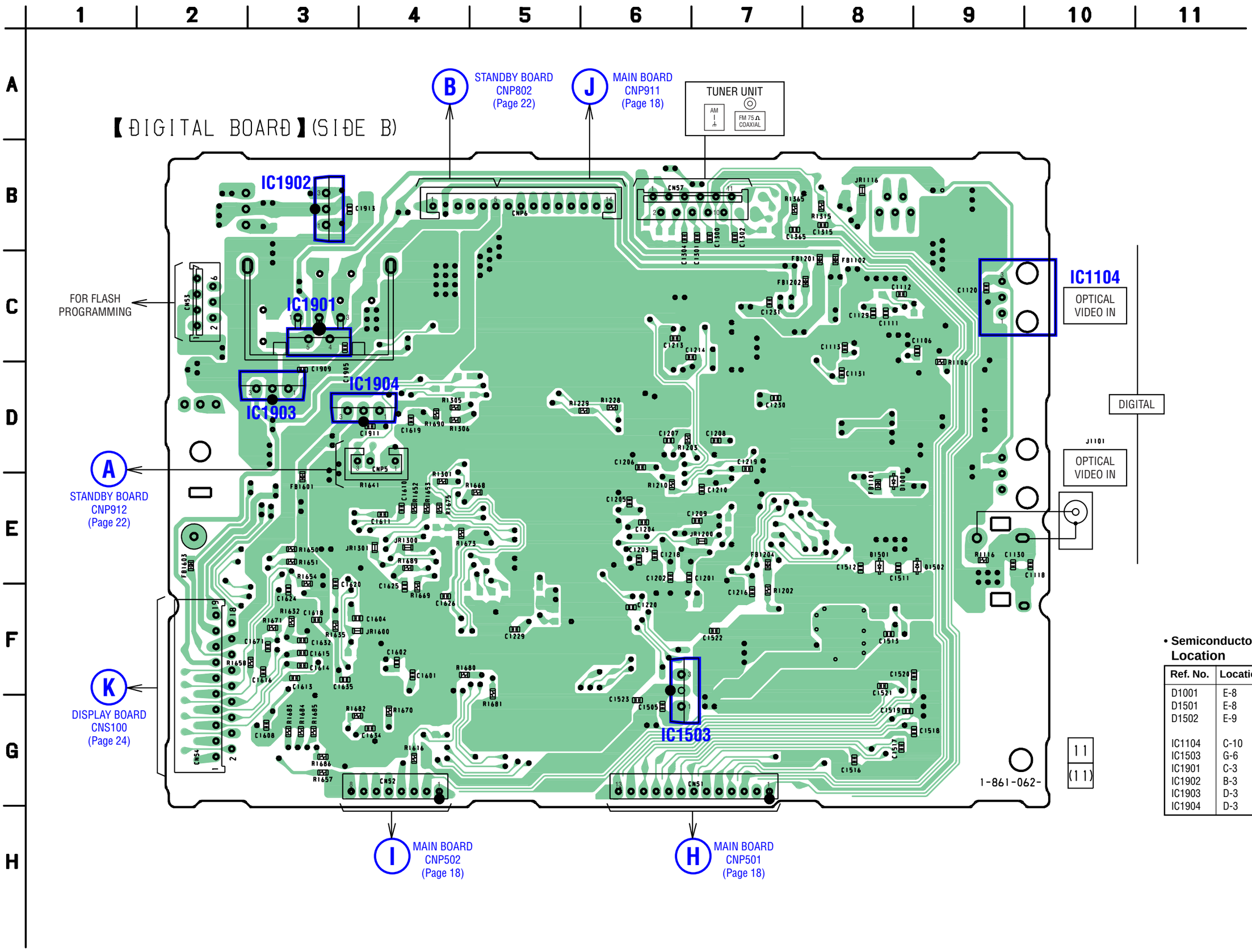

• Semiconductor Location

Ref. No.	Location
D1001	E-8
D1501	E-8
D1502	E-9
IC1104	C-10
IC1503	G-6
IC1901	C-3
IC1902	B-3
IC1903	D-3
IC1904	D-3

3-5. SCHEMATIC DIAGRAM – DIGITAL BOARD (1/2) –

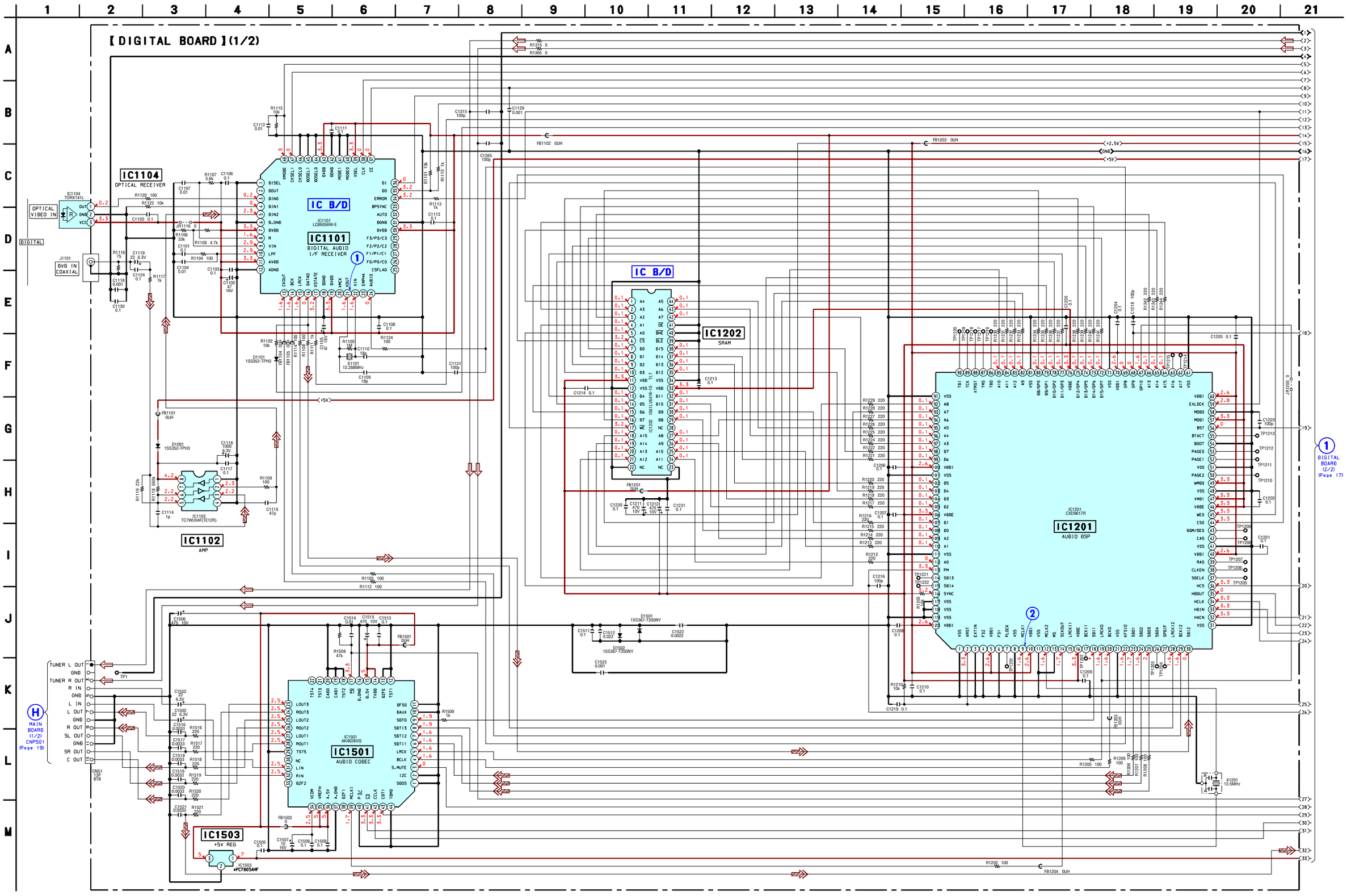

3-6. SCHEMATIC DIAGRAM – DIGITAL BOARD (2/2) –

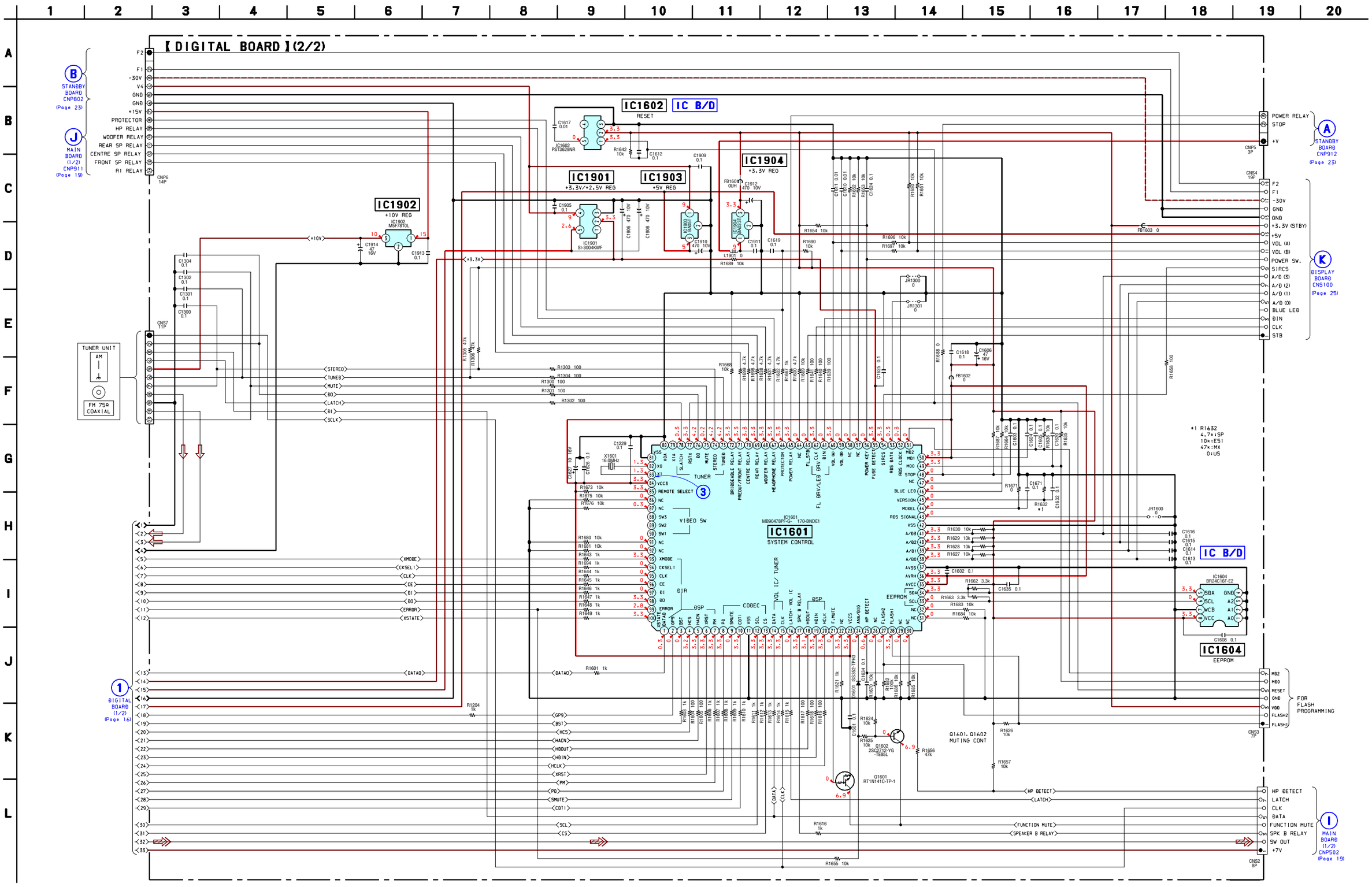

3-7. PRINTED WIRING BOARD – MAIN SECTION –

• See page 10 for Circuit Boards Location. • : Uses unleaded solder.

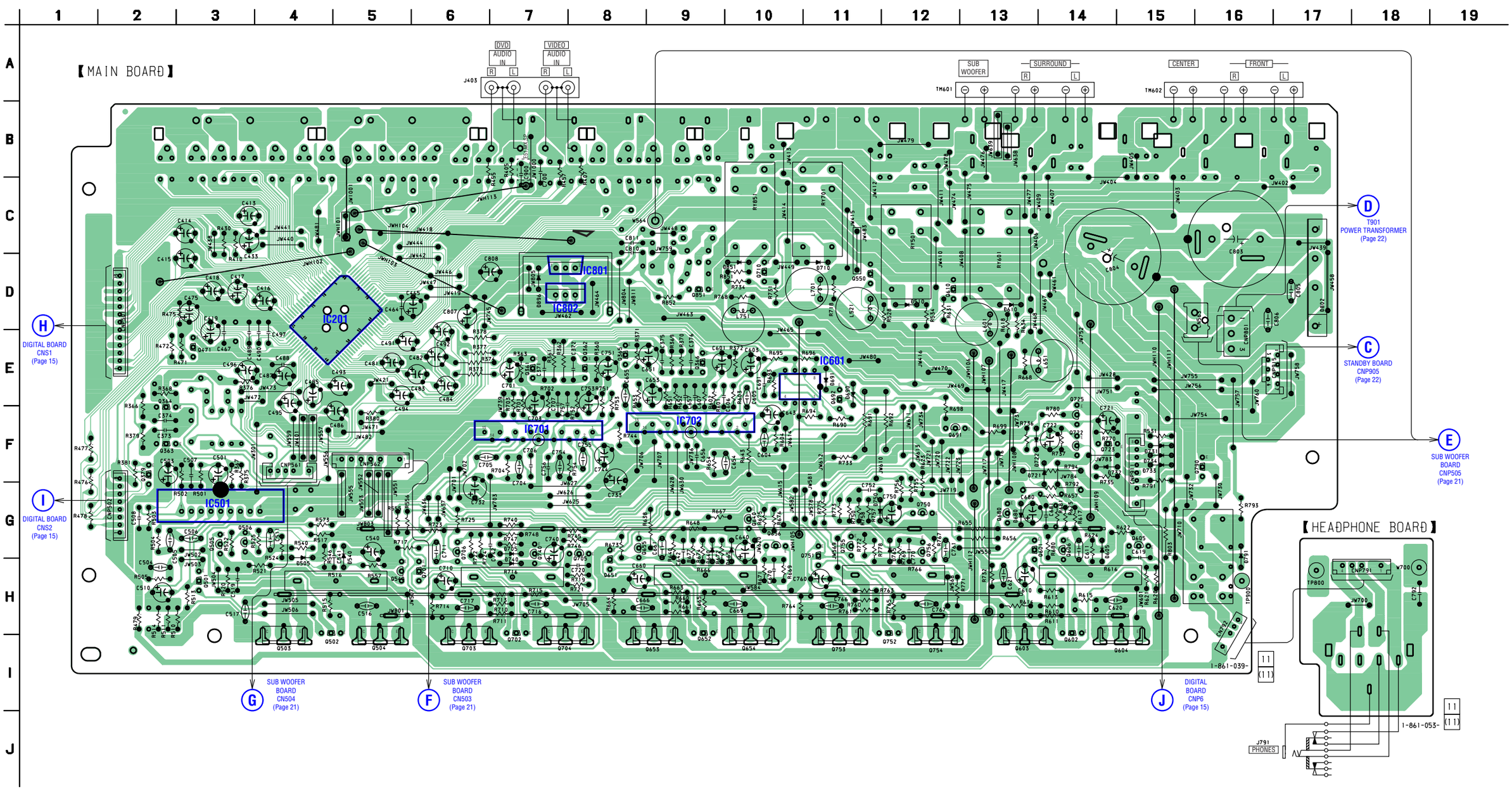

• **Semiconductor Location**

Ref. No.	Location	Ref. No.	Location	Ref. No.	Location	Ref. No.	Location	Ref. No.	Location	Ref. No.	Location
D505	H-4	D732	F-15	IC702	F-9	Q504	I-5	Q653	I-8	Q723	F-15
D510	D-12	D733	F-15	IC801	D-8	Q505	G-3	Q654	I-10	Q725	E-14
D540	H-5	D734	F-15	IC802	D-7	Q506	G-3	Q655	G-8	Q740	H-7
D605	G-14	D740	H-7			Q540	H-5	Q656	G-10	Q750	G-12
D610	D-13	D750	G-12	Q361	E-7	Q550	D-11	Q680	G-13	Q751	G-11
D640	G-9	D765	G-12	Q362	E-8	Q601	G-13	Q691	F-13	Q752	I-12
D665	G-10	D791	G-16	Q363	F-2	Q602	I-14	Q692	F-11	Q753	I-11
D680	G-13	D802	D-17	Q364	E-2	Q603	I-13	Q701	H-6	Q754	I-13
D690	E-11	D851	D-10	Q365	E-8	Q604	I-15	Q702	I-7	Q755	G-11
D691	E-11	D896	D-7	Q366	E-9	Q605	G-15	Q703	I-6	Q756	G-12
D705	G-7			Q379	F-2	Q606	G-14	Q704	I-7	Q790	F-16
D710	D-11	IC201	D-4	Q471	E-3	Q610	D-12	Q705	H-8	Q851	D-9
D721	F-13	IC501	G-3	Q501	H-3	Q640	G-10	Q706	G-6		
D722	F-13	IC601	E-11	Q502	I-4	Q651	H-8	Q710	D-10		
D731	F-15	IC701	F-7	Q503	I-4	Q652	I-9	Q722	F-14		

3-8. SCHEMATIC DIAGRAM – MAIN SECTION (1/2) –

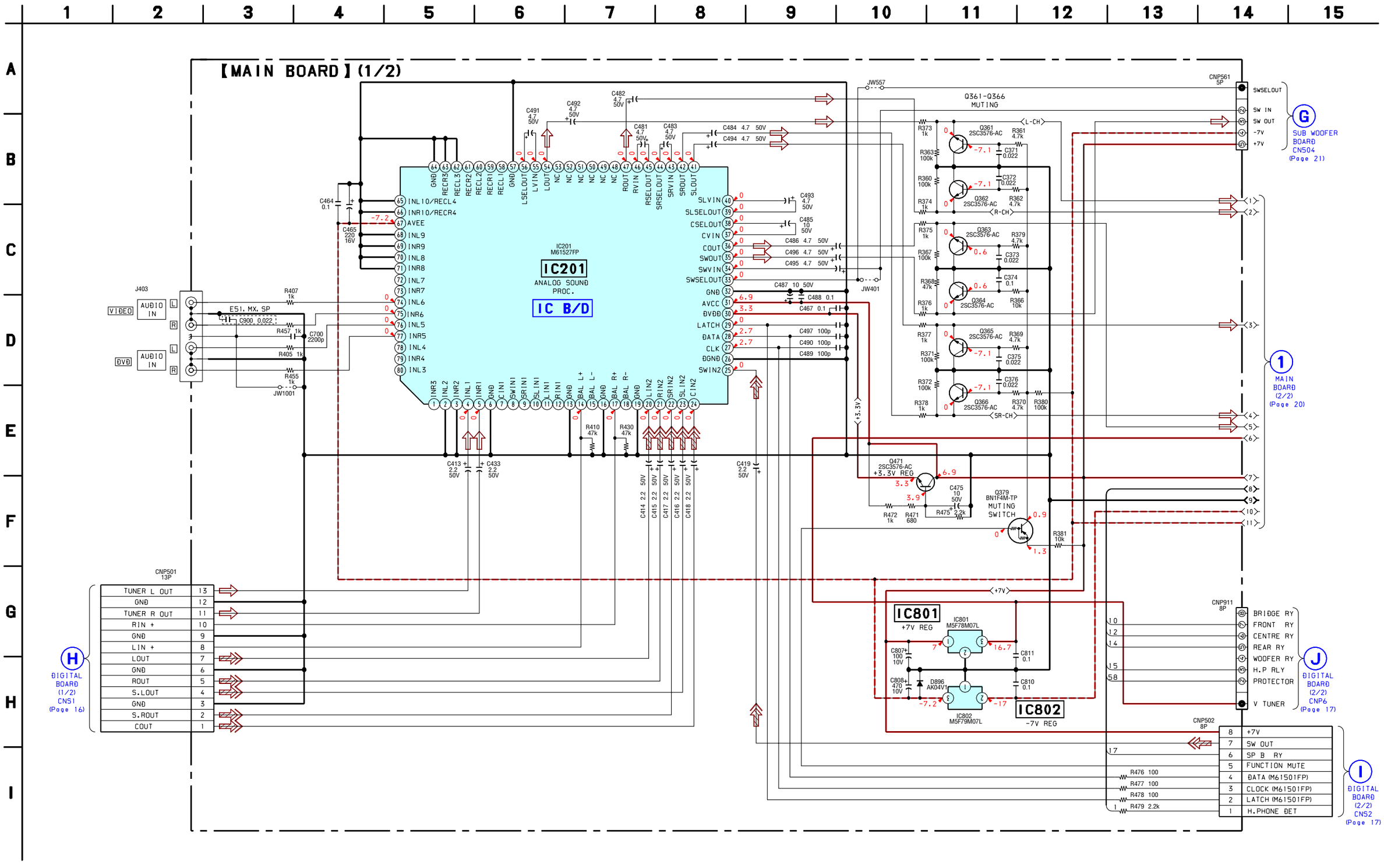

3-9. SCHEMATIC DIAGRAM – MAIN SECTION (2/2) –

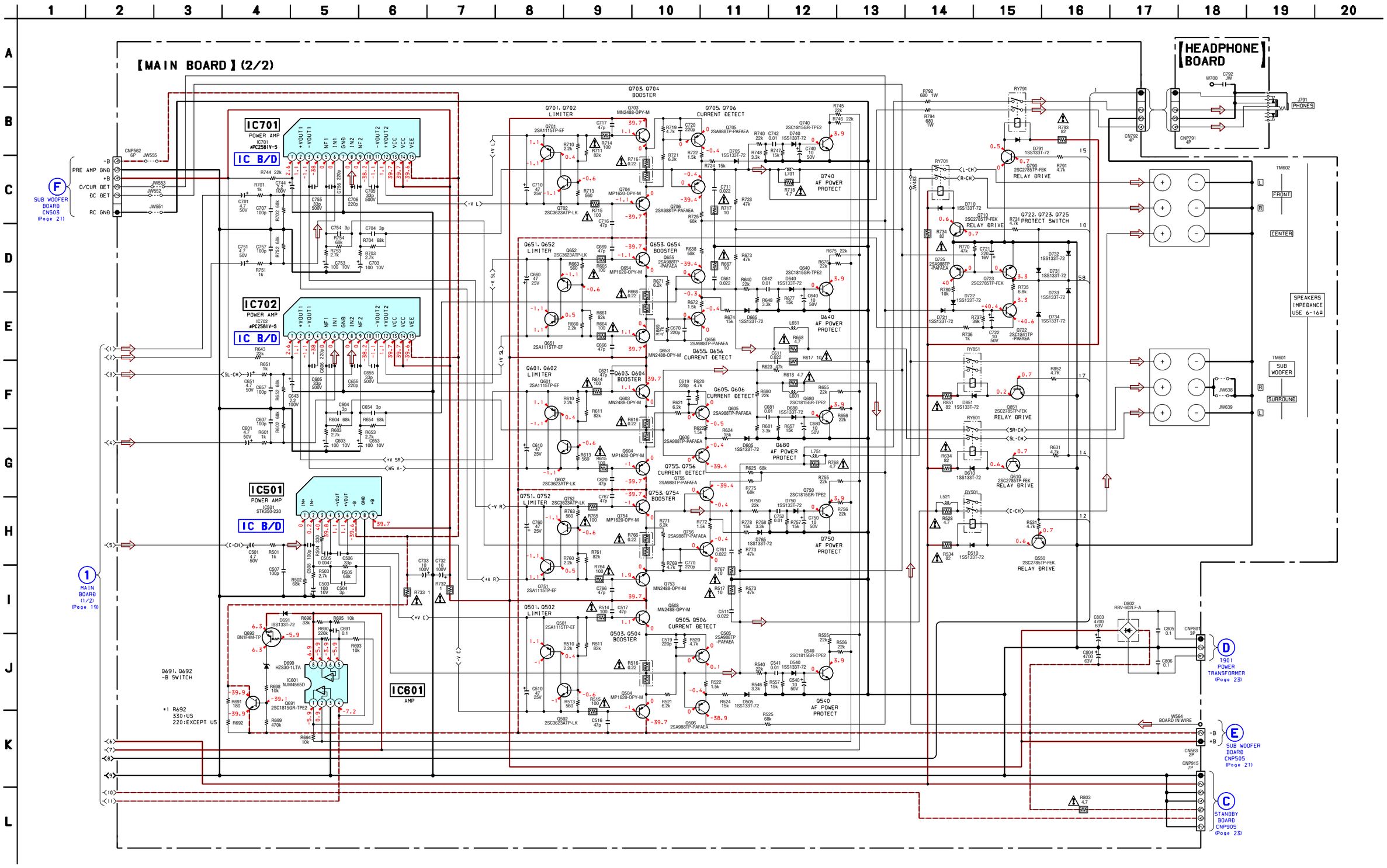

3-10. PRINTED WIRING BOARD – SUB WOOFER BOARD –

- See page 10 for Circuit Boards Location.
- : Uses unleaded solder.

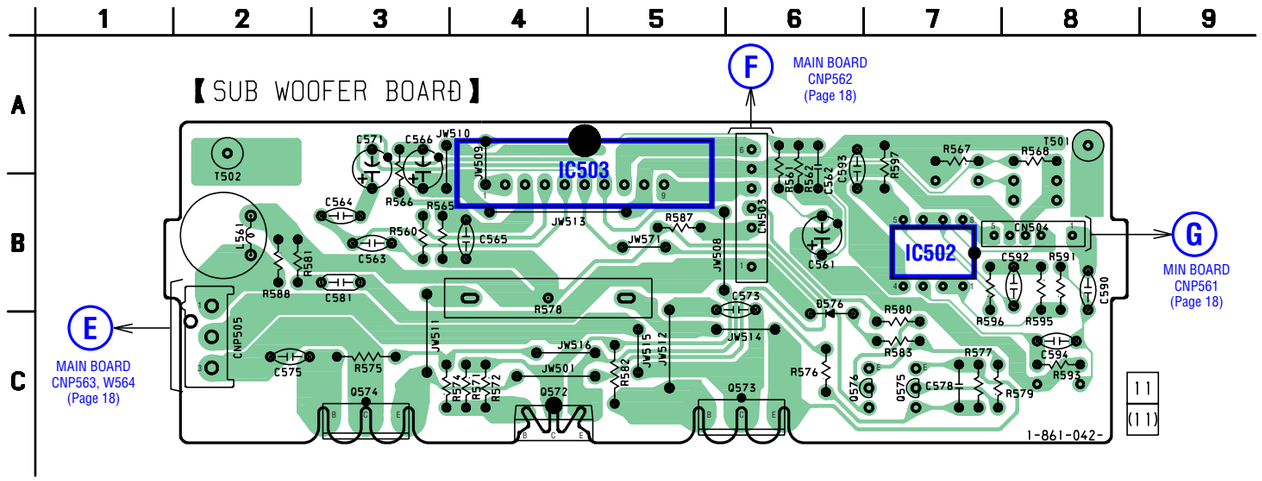

- **Semiconductor Location**

Ref. No.	Location
D576	B-6
IC502	B-7
IC503	A-4
Q572	C-4
Q573	C-6
Q574	C-3
Q575	C-7
Q576	C-6

3-11. SCHEMATIC DIAGRAM – SUB WOOFER BOARD –

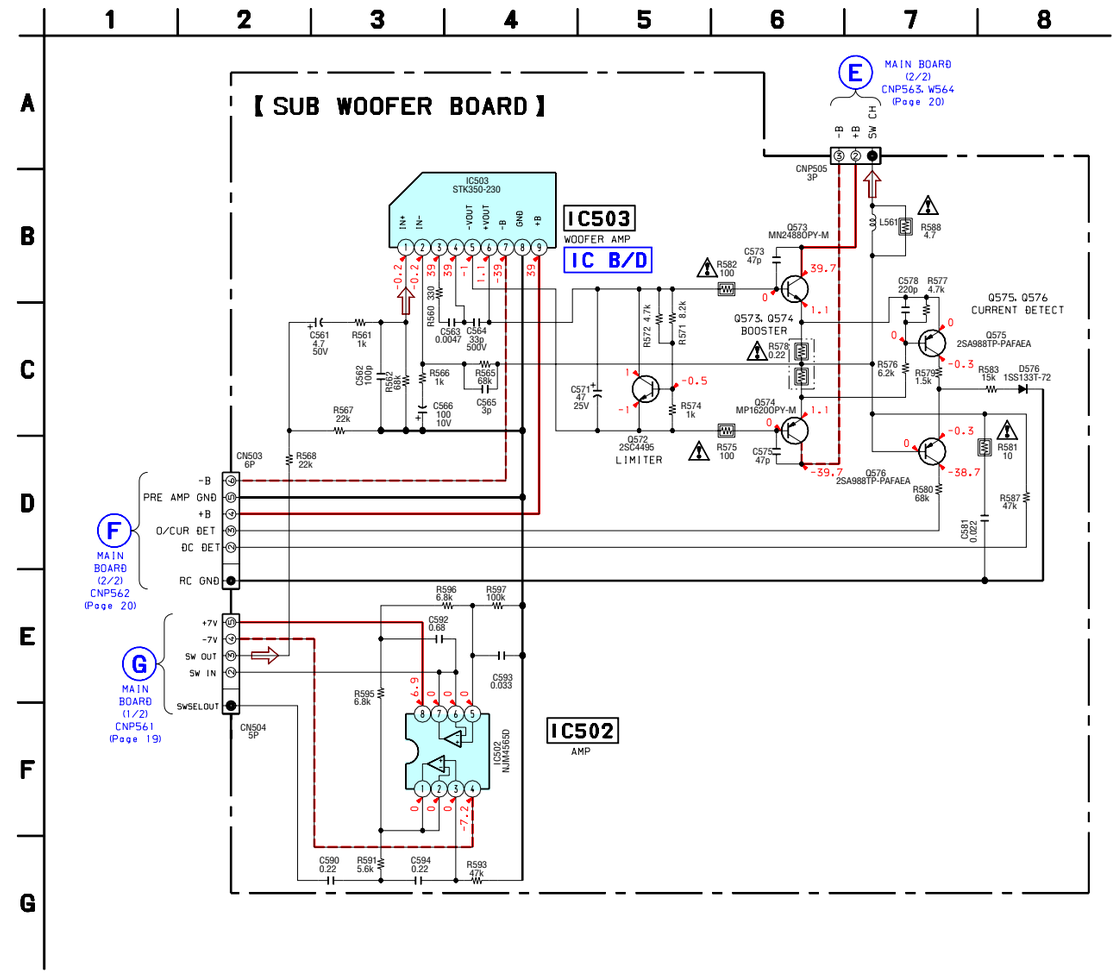

21

3-12. PRINTED WIRING BOARD – POWER SECTION –

• See page 10 for Circuit Boards Location.

• : Uses unleaded solder.

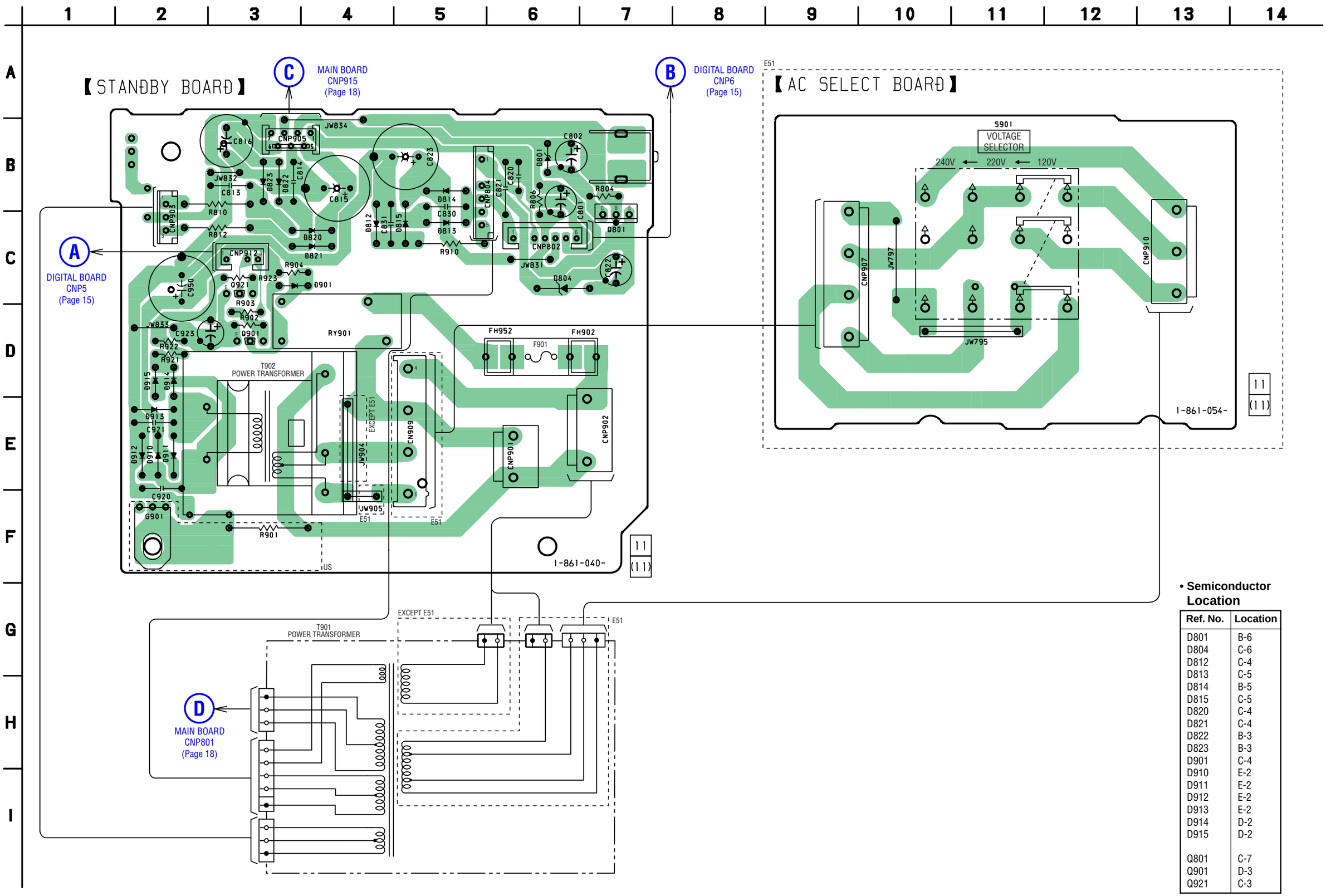

• **Semiconductor Location**

Ref. No.	Location
D801	B-6
D804	C-6
D812	C-4
D813	C-5
D814	B-5
D815	C-5
D820	C-4
D821	C-4
D822	B-3
D823	B-3
D901	C-4
D910	E-2
D911	E-2
D912	E-2
D913	E-2
D914	D-2
D915	D-2
Q801	C-7
Q901	D-3
Q921	C-3

3-13. SCHEMATIC DIAGRAM – POWER SECTION –

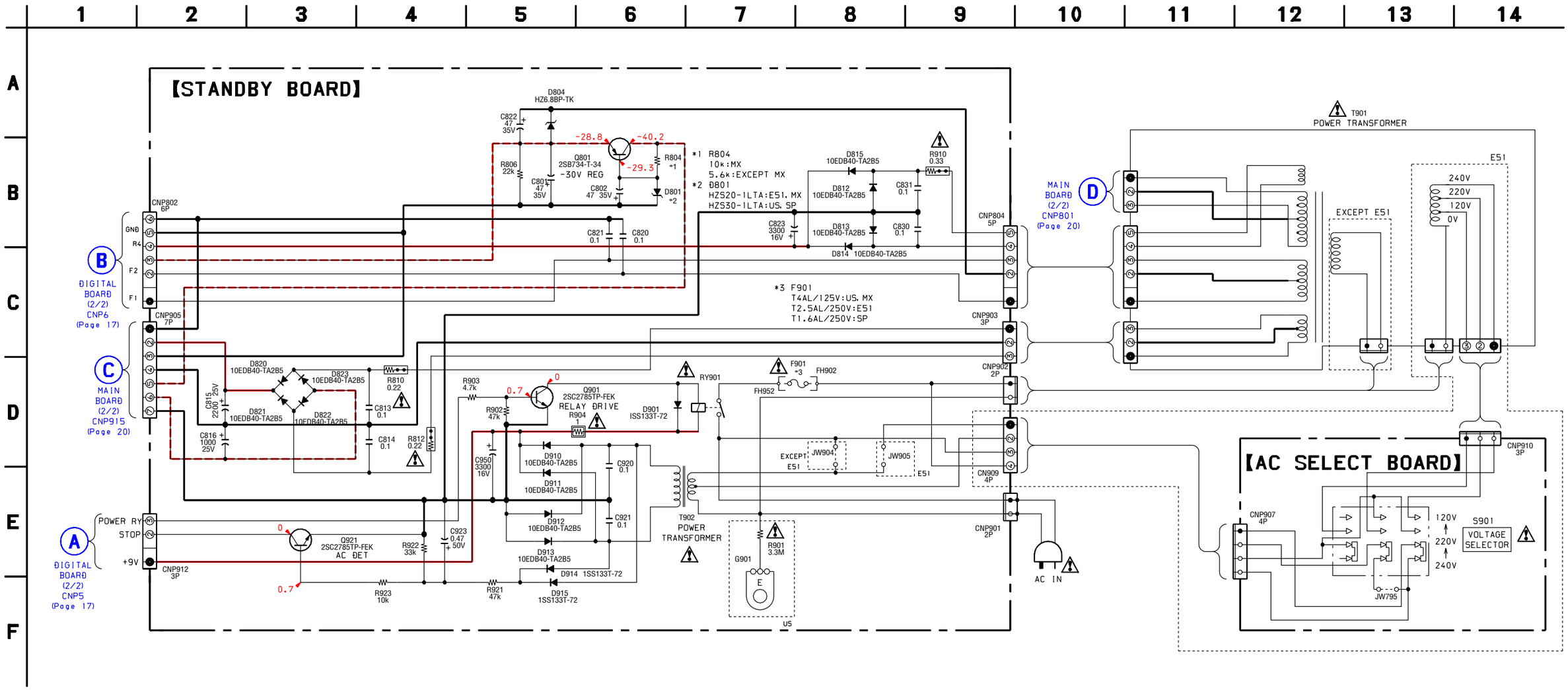

3-14. PRINTED WIRING BOARD – FRONT PANEL SECTION –

• See page 10 for Circuit Boards Location. • : Uses unleaded solder.

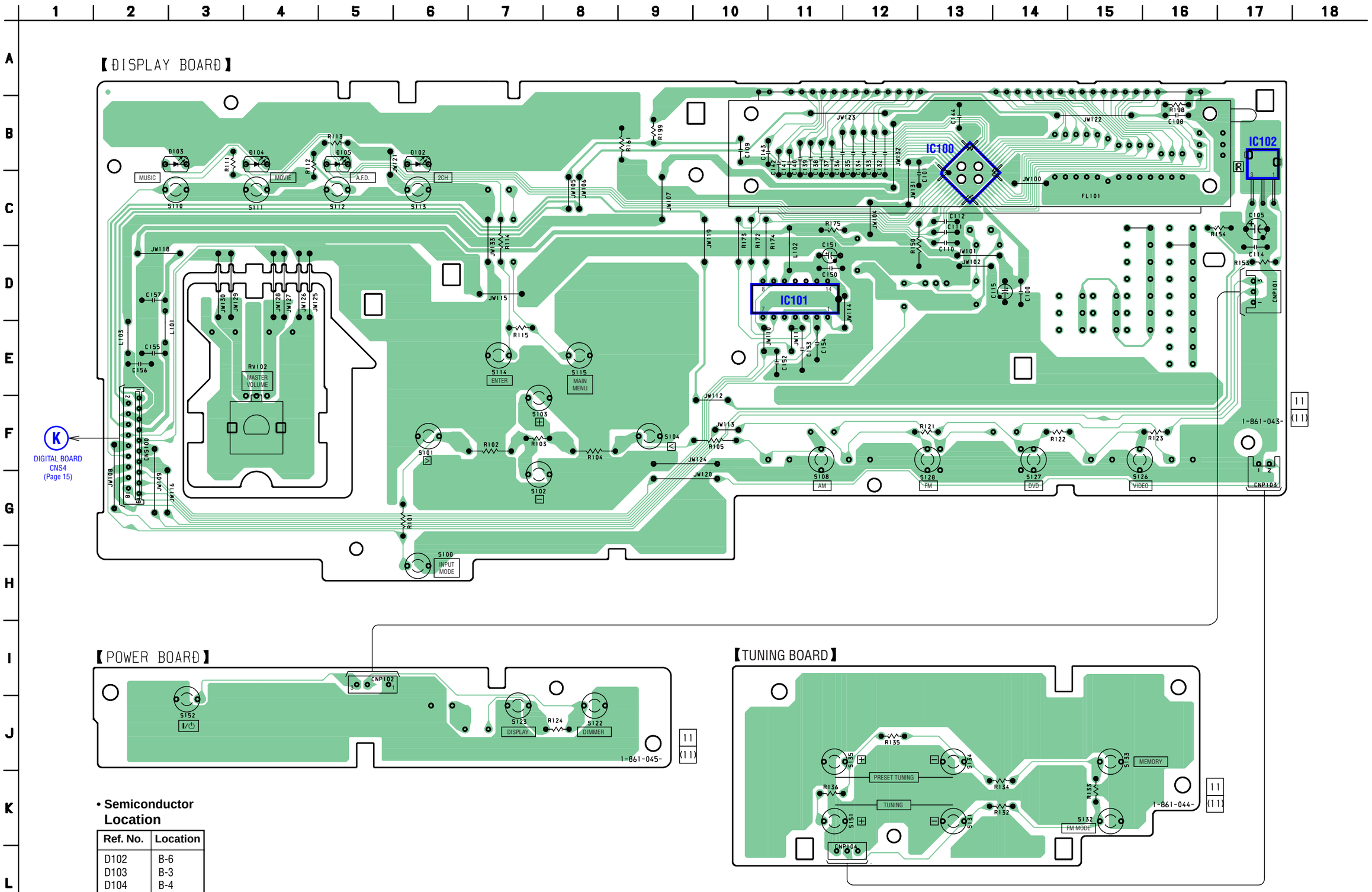

• **Semiconductor Location**

Ref. No.	Location
D102	B-6
D103	B-3
D104	B-4
D105	B-5
IC100	B-13
IC101	D-11
IC102	B-17

3-15. SCHEMATIC DIAGRAM – FRONT PANEL SECTION –

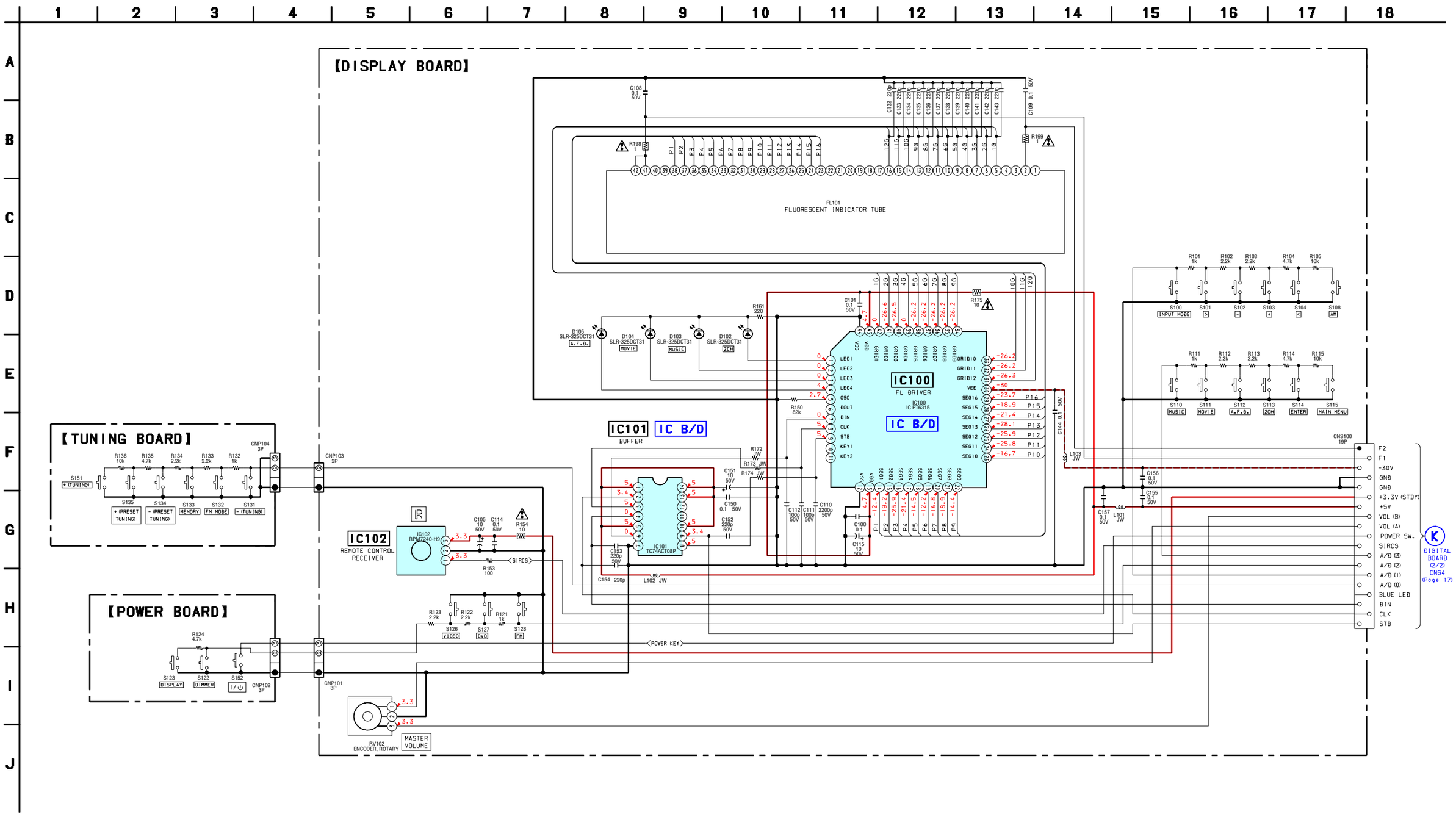

• IC BLOCK DIAGRAMS

IC1101 LC89056W-E (DIGITAL BOARD)

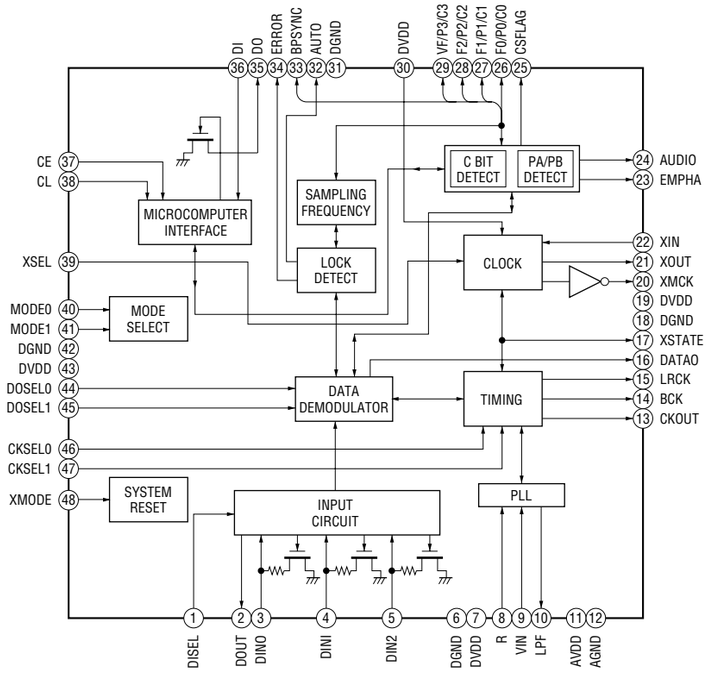

IC1602 PST3629NR (DIGITAL BOARD)

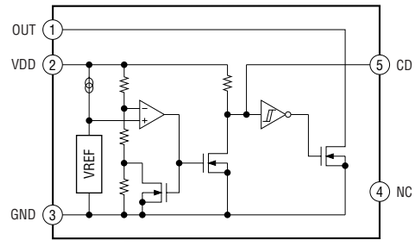

IC1202 IS61LV6416-10TLT (DIGITAL BOARD)

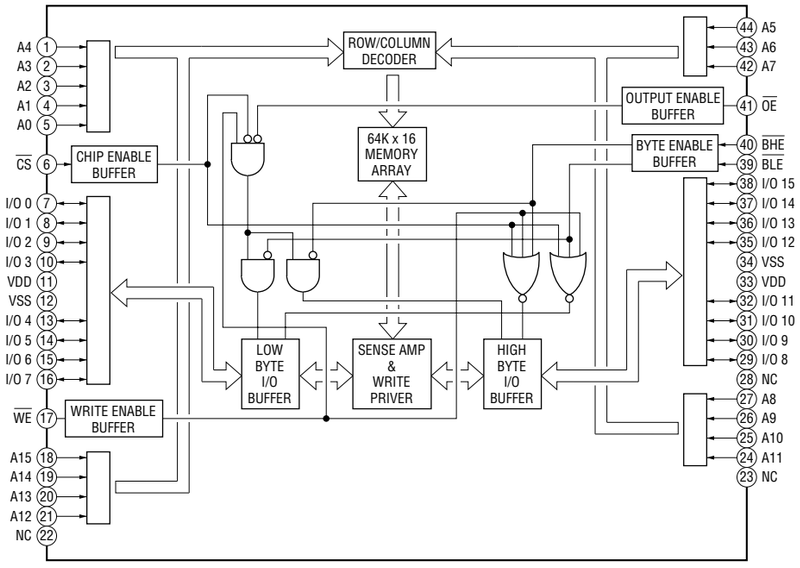

IC1604 BR24C16F-E2 (DIGITAL BOARD)

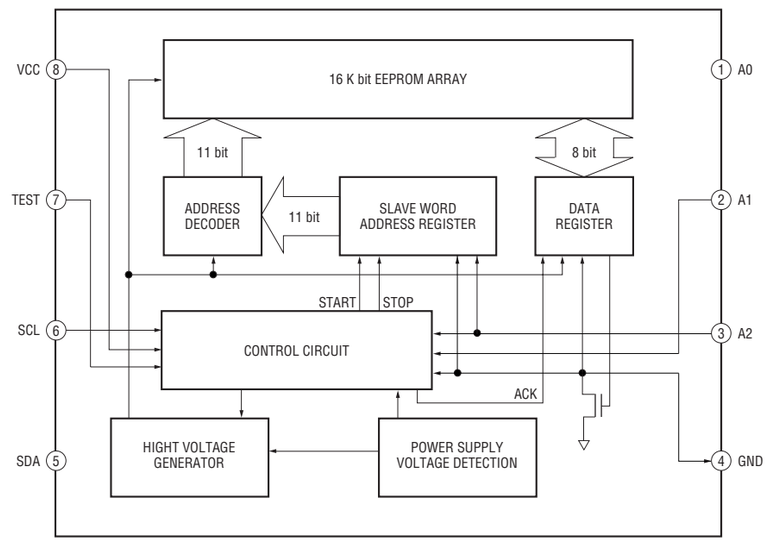

IC100 PT6315 (DISPLAY BOARD)

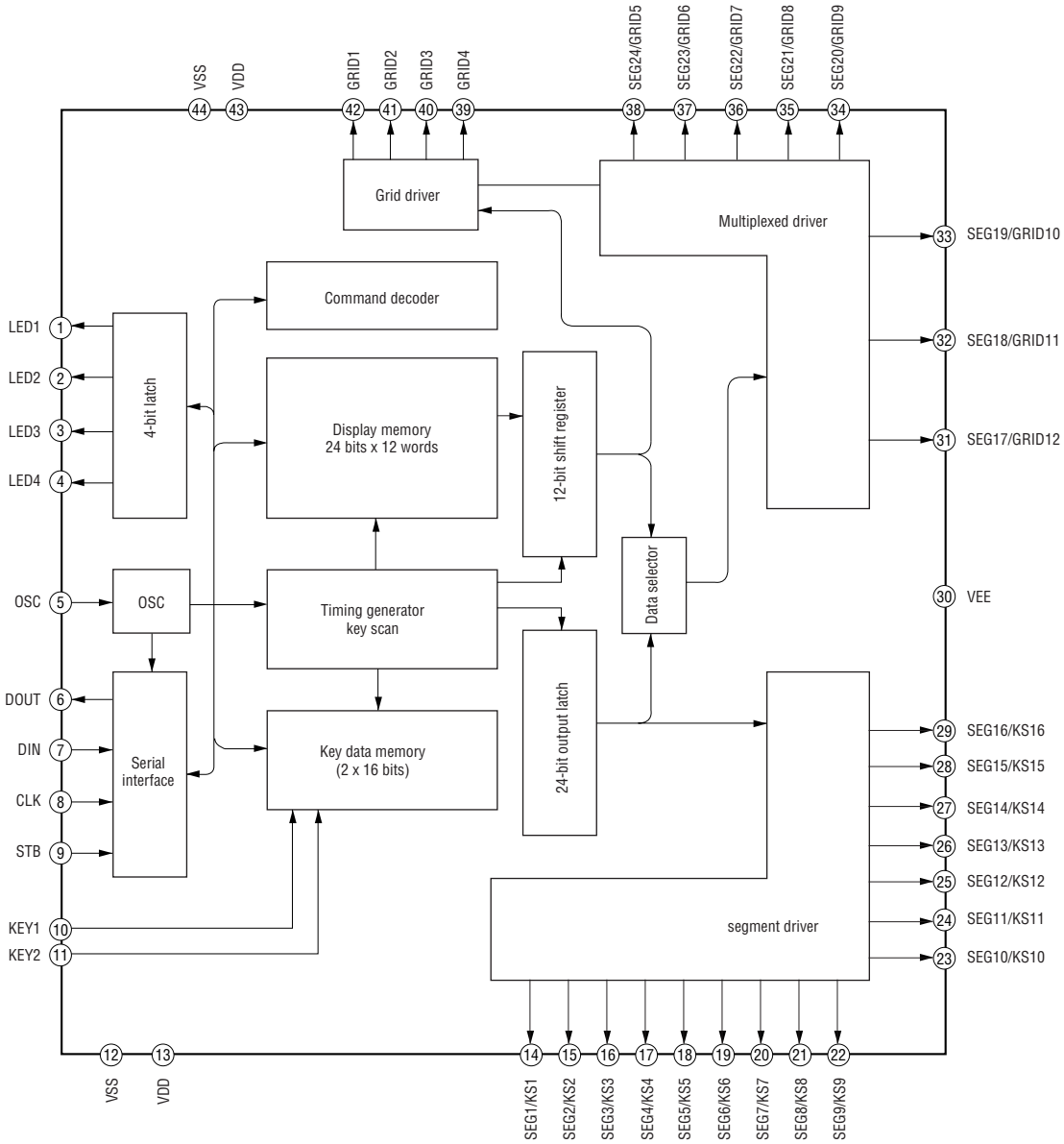

IC101 TC74ACT08P (DISPLAY BOARD)

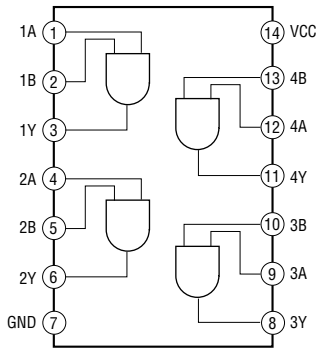

IC201 M61527FP (MAIN BOARD)

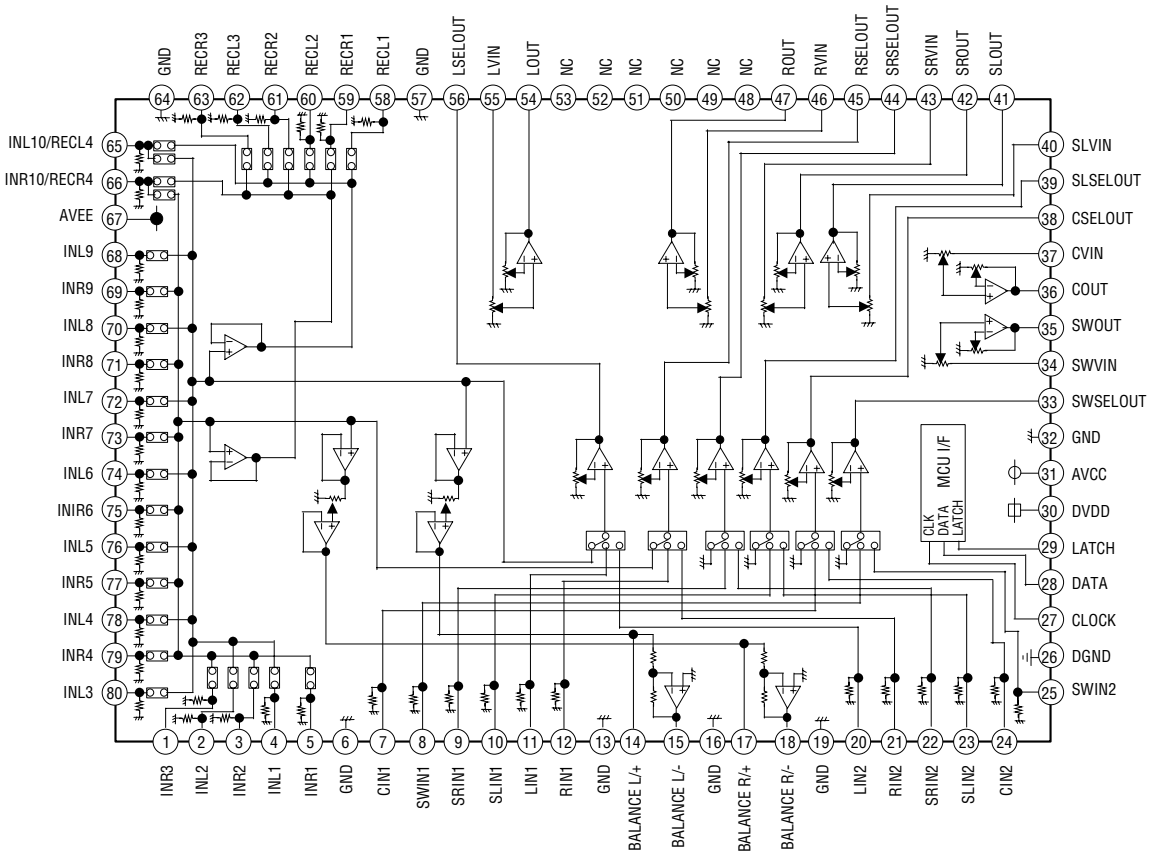

IC501 STK350-230 (MAIN BOARD)
IC503 STK350-230 (SUB WOOFER BOARD)

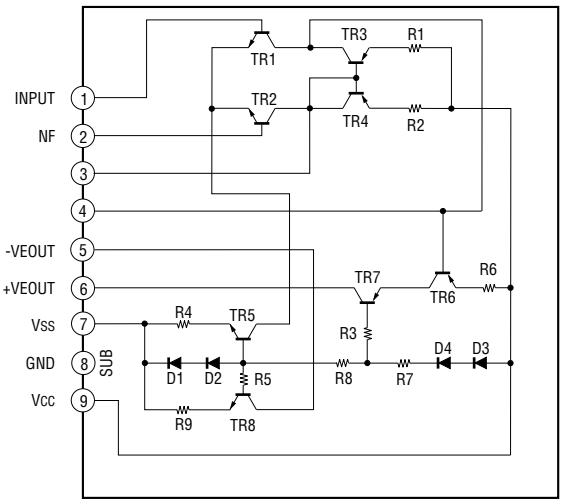

IC701, 702 µPC2581V-S (MAIN BOARD)

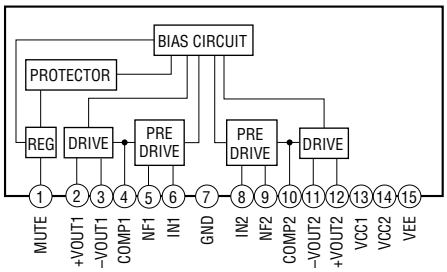

3-16. IC PIN FUNCTION DESCRIPTIONS

• IC1601 MB90478PF-G-170-BNDE1 (SYSTEM CONTROL)

Pin No.	Pin Name	I/O	Description
1	DATAO	I	Audio data signal input from DIR
2	GP9	I	GP9 signal input from DSP
3	BST	O	BST signal output to DSP
4	HCS	O	HCS signal output to DSP
5	HACN	I	HACN signal input from DSP
6	XRST	O	Reset signal output to DSP
7	PM	O	PM signal output to DSP
8	PD	O	Power down signal output to AUDIO CODEC
9	SMUTE	O	Muting signal output to AUDIO CODEC
10	CDT1	O	Control data signal output to AUDIO CODEC
11	VSS	—	Ground terminal
12	SCL	O	Clock signal output to AUDIO CODEC
13	CS	O	Chip select signal output to AUDIO CODEC
14	DATA	O	Control data signal output to the sound processor
15	CLK	O	Clock signal output to the sound processor
16	LATCH	O	Latch signal output to the sound processor
17	SPK B RELAY	O	Speaker B relay control signal output
18	HDOUT	I	HDOUT signal input from DSP
19	HDIN	O	HDIN signal output to DSP
20	HCLK	O	Clock signal output to DSP
21	F.MUTE	O	Muting signal output
22	AC MUTE	O	Muting signal output to the power amplifier
23	VCC5	—	Power supply
24	ANA/DIG	O	Muting and error signal output
25	HP DETECT	I	Headphone switch detect signal input
26	NC	—	Short to ground terminal
27	FLASH2	O	Terminal for FLASH programming
28	FLASH1	I/O	Terminal for FLASH programming
29	NC	—	Short to ground terminal
30	NC	—	Short to ground terminal
31	NC	—	Short to ground terminal
32	NC	—	Short to ground terminal
33	SCL	O	Serial clock output
34	SDA	I/O	Serial data input or output
35	AVCC	—	Analog power supply
36	AVRH	I	Analog reference voltage input
37	AVSS	—	Analog ground terminal
38	A/D0	I	Function key push signal input
39	A/D1	I	Function key push signal input
40	A/D2	I	Function key push signal input
41	A/D3	I	Function key push signal input
42	VSS	—	Ground terminal
43	RDS SIGNAL	I	RDS signal detect input
44	MODEL	I	Version setting input (MODEL)
45	VERSION	I	Version setting input (DESTINATION)
46	BLUE LED	—	Short to ground terminal
47	CRYSTAL SEL	—	Short to ground terminal
48	STOP	I	AC off detect signal input
49	MD0	I	Operation mode setting input
50	MD1	I	Operation mode setting input

Pin No.	Pin Name	I/O	Description
51	MD2	I	Operation mode setting input
52	RDS CLOCK	I	RDS clock signal input (Not used)
53	RDS DATA	I	RDS data signal input (Not used)
54	SIRCS	I	Data signal input from the remote control sensor
55	FUSE DETECT	I	Fuse detect signal input
56	POWER KEY	I	Power switch key detect signal input
57	JOG (B)	I	Jog dial signal input from the rotary encoder
58	JOG (A)	I	Jog dial signal input from the rotary encoder
59	VOL (B)	I	Jog dial signal input from the rotary encoder
60	VOL (A)	I	Jog dial signal input from the rotary encoder
61	DIN	O	Data signal output to the FL tube driver
62	CLK	O	Clock signal output to the FL tube driver
63	FL STB	O	Strobe signal output to the FL tube driver
64	NC	—	Short to ground terminal
65	POWER RELAY	O	Power relay control signal output
66	PROTECTOR	I	Protector status detect signal input
67	HEADPHONE RELAY	O	Headphone relay control signal output
68	WOOFER RELAY	O	Woofer relay control signal output
69	REAR RELAY	O	Rear speaker relay control signal output
70	CENTRE RELAY	O	Centre speaker relay control signal output
71	PREOUT/FRONT RELAY	O	Front speaker relay control signal output
72	R1 RELAY	O	Bridgeable relay control
73	TUNED	I	Tuning a frequency signal input from the tuner
74	STEREO	I	Stereo tuning signal input from the tuner
75	MUTE	O	Muting signal output to the tuner
76	DO	I	Frequency data signal input from the tuner
77	RSTX	I	System reset
78	SLATCH	O	Latch signal output to the tuner
79	X1A	—	Not used
80	X0A	—	Ground terminal
81	VSS	—	Ground terminal
82	X0	—	Connection for a crystal resonator
83	X1	—	Connection for a crystal resonator
84	VCC3	—	Power supply
85	REMOTE SEL	—	Short to ground terminal
86	NC	O	Not used
87	SW4	O	Video select control signal output (Not used)
88	SW3	O	Video select control signal output (Not used)
89	SW2	O	Video select control signal output (Not used)
90	SW1	O	Video muting control signal output (Not used)
91	NC	—	Short to ground terminal
92	NC	—	Short to ground terminal
93	XMODE	O	Reset signal output to DIR
94	CKSEL 1	O	CKSEL control signal to DIR
95	CLK	O	Clock signal output to DIR
96	CE	O	Chip enable signal output to DIR
97	DI	O	Data signal output to DIR
98	DO	I	Data signal input from DIR
99	ERROR	I	PLL error muting signal input from DIR
100	XSTATE	I	XSTATE data signal input from DIR

SECTION 4
EXPLODED VIEWS

NOTE:
- -XX, -X mean standardized parts, so they may have some differences from the original one.
- Items marked "*" are not stocked since they are seldom required for routine service. Some delay should be anticipated when ordering these items.
- The mechanical parts with no reference number in the exploded views are not supplied.
- Abbreviation
  E51 : Chilean and Peruvian models
  MX : Mexican model
  SP : Singapore model

The components identified by mark ⚠ or dotted line with mark ⚠ are critical for safety. Replace only with part number specified.

4-1. FRONT PANEL SECTION

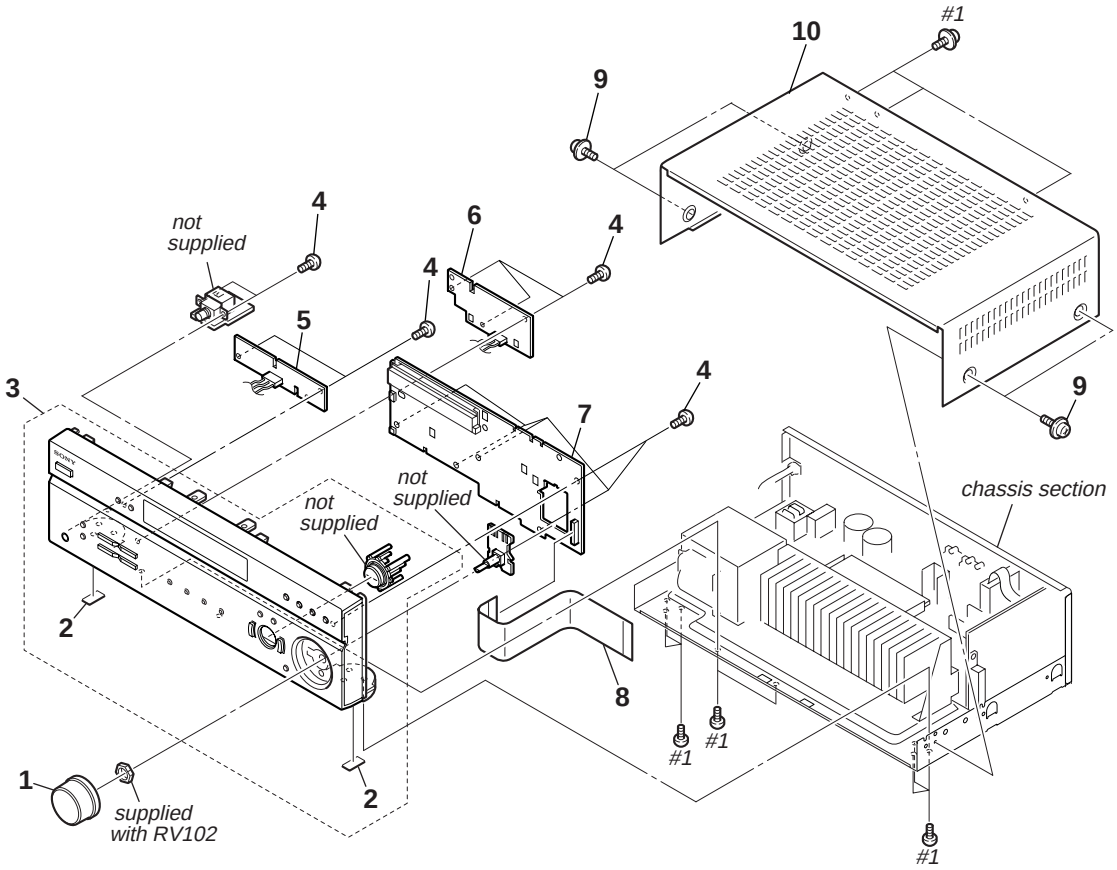

Ref. No.	Part No.	Description	Remarks	Ref. No.	Part No.	Description	Remarks
1	4-232-113-12	KNOB (VOL)		6	1-861-044-11	TUNING BOARD	
2	4-977-358-01	CUSHION		7	A-4750-419-A	DISPLAY BOARD, COMPLETE	
3	X-4956-128-1	FRONT PANEL ASSY (US)		8	1-773-114-11	WIRE (FLAT TYPE)(19 CORE)	
3	X-4956-129-1	FRONT PANEL ASSY (E51,MX,SP)		9	4-210-291-11	SCREW (CASE 3 TP2)	
4	4-951-620-01	SCREW (2.6X8), +BVTP		10	4-245-939-21	CASE	
5	1-861-045-11	POWER BOARD		#1	7-685-646-79	SCREW +BVTP 3X8 TYPE2 IT-3	

4-2. CHASSIS SECTION

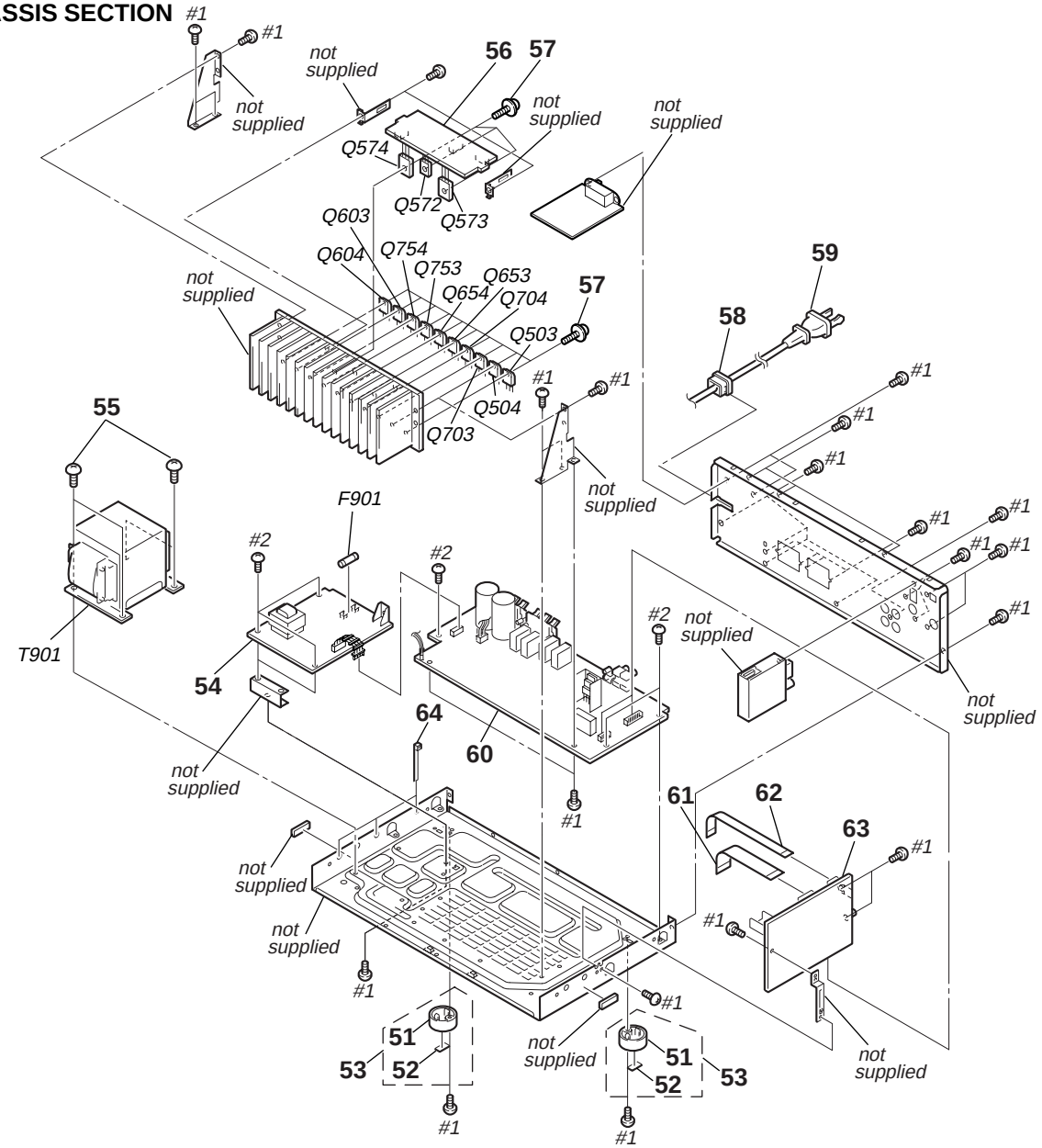

Ref. No.	Part No.	Description	Remarks
51	4-232-237-01	FOOT (DIA. 30)	
52	4-977-358-01	CUSHION	
53	X-4953-448-1	FOOT ASSY	
54	A-4750-409-A	STANDBY BOARD, COMPLETE (SP)	
54	A-4750-423-A	STANDBY BOARD, COMPLETE (E51)	
54	A-4750-608-A	STANDBY BOARD, COMPLETE (US)	
54	A-4750-427-A	STANDBY BOARD, COMPLETE (MX)	
55	4-249-675-01	+BV SUMITITE S 4X6 ROUND	
56	A-4750-417-A	SUB WOOFER BOARD, COMPLETE	
57	3-905-609-01	SCREW (TRANSISTOR)	
* 58	3-703-244-00	BUSHING (2104), CORD	
⚠ 59	1-777-071-23	CORD, POWER (E51, SP)	
⚠ 59	1-783-532-11	CORD, POWER (US, MX)	
60	A-4750-415-A	MAIN BOARD, COMPLETE (US)	
60	A-4752-121-A	MAIN BOARD, COMPLETE (E51, MX, SP)	
61	1-769-937-11	WIRE (FLAT TYPE)(11 CORE)	
62	1-575-662-31	WIRE (FLAT TYPE)(5 CORE)	
63	A-4750-421-A	DIGITAL BOARD, COMPLETE (US)	
63	A-4752-122-A	DIGITAL BOARD, COMPLETE (E51)	
63	A-4752-127-A	DIGITAL BOARD, COMPLETE (SP)	
63	A-4752-129-A	DIGITAL BOARD, COMPLETE (MX)	
64	3-701-748-00	CLAMP	

Ref. No.	Part No.	Description	Remarks
⚠ F901	1-532-464-32	FUSE T2.5AL/250V (E51)	
⚠ F901	1-532-503-32	FUSE T1.6AL/250V (SP)	
⚠ F901	1-533-452-11	FUSE, GLASS TUBE (DIA. 5) T4.0AL/125V (US, MX)	
Q503	8-749-010-25	IC MN2488-OPY-M	
Q504	8-749-010-26	IC MP1620-OPY-M	
Q572	8-729-026-08	TRANSISTOR 2SC4495	
Q573	8-749-010-25	IC MN2488-OPY-M	
Q574	8-749-010-26	IC MP1620-OPY-M	
Q603	8-749-010-25	IC MN2488-OPY-M	
Q604	8-749-010-26	IC MP1620-OPY-M	
Q653	8-749-010-25	IC MN2488-OPY-M	
Q654	8-749-010-26	IC MP1620-OPY-M	
Q703	8-749-010-25	IC MN2488-OPY-M	
Q704	8-749-010-26	IC MP1620-OPY-M	
Q753	8-749-010-25	IC MN2488-OPY-M	
Q754	8-749-010-26	IC MP1620-OPY-M	
⚠ T901	1-443-185-11	POWER TRANSFORMER (US, MX)	
⚠ T901	1-443-186-11	POWER TRANSFORMER (E51)	
⚠ T901	1-443-211-11	POWER TRANSFORMER (SP)	
#1	7-685-646-79	SCREW +BVTP 3X8 TYPE2 IT-3	
#2	7-685-645-79	SCREW +BVTP 3X6 TYPE2 IT-3	

The components identified by mark ⚠ or dotted line with mark ⚠ are critical for safety.
Replace only with part number specified.

SECTION 5
ELECTRICAL PARTS LIST

AC SELECT **DIGITAL**

NOTE:
- Due to standardization, replacements in the parts list may be different from the parts specified in the diagrams or the components used on the set.
- -XX, -X mean standardized parts, so they may have some difference from the original one.
- Items marked "*" are not stocked since they are seldom required for routine service. Some delay should be anticipated when ordering these items.
- COILS
  uH: µH
- RESISTORS
  All resistors are in ohms.
  METAL: metal-film resistor
  METAL OXIDE: Metal Oxide-film resistor
  F: nonflammable
- CAPACITORS:
  uF: µF
- SEMICONDUCTORS
  In each case, u: µ, for example:
  uA...: µA... , uPA... , µPA... ,
  uPB... , µPB... , uPC... , µPC... ,
  uPD..., µPD...
- Abbreviation
  E51 : Chilear and Peruvian models
  MX : Mexican model
  SP : Singapore model

When indicating parts by reference number, please include the board name.

The components identified by mark ⚠ or dotted line with mark ⚠ are critical for safety. Replace only with part number specified.

Ref. No.	Part No.	Description			Remarks
		AC SELECT BOARD (E51)			
		**********			
		< CONNECTOR >			
CNP907	1-568-106-11	PIN, CONNECTOR (3.96mm PITCH) 4P (E51)			
* CNP910	1-564-687-11	PIN, CONNECTOR (3.96mm PITCH) 3P (E51)			
		< SWITCH >			
⚠S901	1-571-437-21	SWITCH, POWER VOLTAGE CHANGE (VOLTAGE SELECTOR)(E51)			
**********					
	A-4750-421-A	DIGITAL BOARD, COMPLETE (US)			
		**********			
	A-4752-122-A	DIGITAL BOARD, COMPLETE (E51)			
		**********			
	A-4752-127-A	DIGITAL BOARD, COMPLETE (SP)			
		**********			
	A-4752-129-A	DIGITAL BOARD, COMPLETE (MX)			
		**********			
	7-685-646-79	SCREW +BVTP 3X8 TYPE2 IT-3			
		< CAPACITOR >			
C1101	1-164-156-11	CERAMIC CHIP	0.1uF		25V
C1102	1-126-204-11	ELECT CHIP	47uF	20%	16V
C1103	1-164-156-11	CERAMIC CHIP	0.1uF		25V
C1104	1-162-974-11	CERAMIC CHIP	0.01uF		50V
C1105	1-126-204-11	ELECT CHIP	47uF	20%	16V
C1106	1-164-156-11	CERAMIC CHIP	0.1uF		25V
C1107	1-162-974-11	CERAMIC CHIP	0.01uF		50V
C1108	1-164-156-11	CERAMIC CHIP	0.1uF		25V
C1109	1-162-918-11	CERAMIC CHIP	18PF	5.00%	50V
C1110	1-162-918-11	CERAMIC CHIP	18PF	5.00%	50V
C1111	1-164-156-11	CERAMIC CHIP	0.1uF		25V
C1112	1-162-974-11	CERAMIC CHIP	0.01uF		50V
C1113	1-164-156-11	CERAMIC CHIP	0.1uF		25V
C1114	1-162-905-11	CERAMIC CHIP	1PF	0.25PF	50V
C1115	1-162-923-11	CERAMIC CHIP	47PF	5%	50V
C1116	1-110-530-11	ELECT CHIP	1000uF	20%	6.3V
C1117	1-164-156-11	CERAMIC CHIP	0.1uF		25V
C1118	1-115-416-11	CERAMIC CHIP	0.001uF	5.00%	25V
C1119	1-124-778-00	ELECT CHIP	22uF	20%	6.3V
C1120	1-164-156-11	CERAMIC CHIP	0.1uF		25V
C1124	1-164-156-11	CERAMIC CHIP	0.1uF		25V
C1129	1-115-416-11	CERAMIC CHIP	0.001uF	5.00%	25V
C1130	1-164-156-11	CERAMIC CHIP	0.1uF		25V
C1131	1-162-927-11	CERAMIC CHIP	100PF	5%	50V
C1201	1-164-156-11	CERAMIC CHIP	0.1uF		25V
C1202	1-164-156-11	CERAMIC CHIP	0.1uF		25V
C1203	1-164-156-11	CERAMIC CHIP	0.1uF		25V
C1204	1-164-156-11	CERAMIC CHIP	0.1uF		25V
C1205	1-164-156-11	CERAMIC CHIP	0.1uF		25V
C1206	1-164-156-11	CERAMIC CHIP	0.1uF		25V
C1207	1-164-156-11	CERAMIC CHIP	0.1uF		25V
C1208	1-164-156-11	CERAMIC CHIP	0.1uF		25V
C1209	1-164-156-11	CERAMIC CHIP	0.1uF		25V
C1210	1-164-156-11	CERAMIC CHIP	0.1uF		25V
C1211	1-128-396-11	ELECT CHIP	470uF	20%	10V
C1212	1-128-396-11	ELECT CHIP	470uF	20%	10V
C1213	1-164-156-11	CERAMIC CHIP	0.1uF		25V
C1214	1-164-156-11	CERAMIC CHIP	0.1uF		25V
C1216	1-162-927-11	CERAMIC CHIP	100PF	5%	50V
C1218	1-162-927-11	CERAMIC CHIP	100PF	5%	50V
C1219	1-164-156-11	CERAMIC CHIP	0.1uF		25V
C1220	1-162-927-11	CERAMIC CHIP	100PF	5%	50V
C1229	1-164-156-11	CERAMIC CHIP	0.1uF		25V
C1230	1-164-156-11	CERAMIC CHIP	0.1uF		25V
C1231	1-164-156-11	CERAMIC CHIP	0.1uF		25V
C1300	1-164-156-11	CERAMIC CHIP	0.1uF		25V
C1301	1-164-156-11	CERAMIC CHIP	0.1uF		25V
C1302	1-164-156-11	CERAMIC CHIP	0.1uF		25V
C1304	1-164-156-11	CERAMIC CHIP	0.1uF		25V
C1315	1-162-927-11	CERAMIC CHIP	100PF	5%	50V
C1365	1-162-927-11	CERAMIC CHIP	100PF	5%	50V
C1502	1-124-778-00	ELECT CHIP	22uF	20%	6.3V
C1505	1-164-156-11	CERAMIC CHIP	0.1uF		25V
C1506	1-128-396-11	ELECT CHIP	470uF	20%	10V
C1507	1-124-779-00	ELECT CHIP	10uF	20%	16V
C1508	1-164-156-11	CERAMIC CHIP	0.1uF		25V
C1509	1-164-156-11	CERAMIC CHIP	0.1uF		25V
C1511	1-164-156-11	CERAMIC CHIP	0.1uF		25V
C1512	1-162-995-11	CERAMIC CHIP	0.022uF		50V
C1513	1-164-156-11	CERAMIC CHIP	0.1uF		25V
C1514	1-162-974-11	CERAMIC CHIP	0.01uF		50V
C1515	1-128-396-11	ELECT CHIP	470uF	20%	10V
C1516	1-162-967-11	CERAMIC CHIP	0.0033uF	10%	50V
C1517	1-162-967-11	CERAMIC CHIP	0.0033uF	10%	50V
C1518	1-162-967-11	CERAMIC CHIP	0.0033uF	10%	50V

DIGITAL

Ref. No.	Part No.	Description			Remarks
C1519	1-162-967-11	CERAMIC CHIP	0.0033uF	10%	50V
C1520	1-162-967-11	CERAMIC CHIP	0.0033uF	10%	50V
C1521	1-162-967-11	CERAMIC CHIP	0.0033uF	10%	50V
C1522	1-162-966-11	CERAMIC CHIP	0.0022uF	10%	50V
C1523	1-115-416-11	CERAMIC CHIP	0.001uF	5.00%	25V
C1552	1-124-778-00	ELECT CHIP	22uF	20%	6.3V
C1601	1-164-156-11	CERAMIC CHIP	0.1uF		25V
C1602	1-164-156-11	CERAMIC CHIP	0.1uF		25V
C1603	1-164-156-11	CERAMIC CHIP	0.1uF		25V
C1604	1-164-156-11	CERAMIC CHIP	0.1uF		25V
C1605	1-164-156-11	CERAMIC CHIP	0.1uF		25V
C1606	1-126-204-11	ELECT CHIP	47uF	20%	16V
C1608	1-164-156-11	CERAMIC CHIP	0.1uF		25V
C1610	1-162-974-11	CERAMIC CHIP	0.01uF		50V
C1611	1-162-974-11	CERAMIC CHIP	0.01uF		50V
C1612	1-164-156-11	CERAMIC CHIP	0.1uF		25V
C1613	1-164-156-11	CERAMIC CHIP	0.1uF		25V
C1614	1-164-156-11	CERAMIC CHIP	0.1uF		25V
C1615	1-164-156-11	CERAMIC CHIP	0.1uF		25V
C1616	1-164-156-11	CERAMIC CHIP	0.1uF		25V
C1617	1-162-974-11	CERAMIC CHIP	0.01uF		50V
C1618	1-164-156-11	CERAMIC CHIP	0.1uF		25V
C1619	1-164-156-11	CERAMIC CHIP	0.1uF		25V
C1620	1-164-156-11	CERAMIC CHIP	0.1uF		25V
C1624	1-164-156-11	CERAMIC CHIP	0.1uF		25V
C1625	1-164-156-11	CERAMIC CHIP	0.1uF		25V
C1626	1-164-156-11	CERAMIC CHIP	0.1uF		25V
C1627	1-124-779-00	ELECT CHIP	10uF	20%	16V
C1632	1-164-156-11	CERAMIC CHIP	0.1uF		25V
C1634	1-164-156-11	CERAMIC CHIP	0.1uF		25V
C1635	1-164-156-11	CERAMIC CHIP	0.1uF		25V
C1671	1-164-156-11	CERAMIC CHIP	0.1uF		25V
C1905	1-164-156-11	CERAMIC CHIP	0.1uF		25V
C1906	1-128-396-11	ELECT CHIP	470uF	20%	10V
C1908	1-128-396-11	ELECT CHIP	470uF	20%	10V
C1909	1-164-156-11	CERAMIC CHIP	0.1uF		25V
C1910	1-128-396-11	ELECT CHIP	470uF	20%	10V
C1911	1-164-156-11	CERAMIC CHIP	0.1uF		25V
C1912	1-128-396-11	ELECT CHIP	470uF	20%	10V
C1913	1-164-156-11	CERAMIC CHIP	0.1uF		25V
C1914	1-126-204-11	ELECT CHIP	47uF	20%	16V
		< CONNECTOR >			
CNP5	1-779-978-11	PIN, CONNECTOR 3P			
CNP6	1-784-929-11	PIN, CONNECTOR 14P			
		< CONNECTOR >			
CNS1	1-764-865-41	CONNECTOR, BOARD TO BOARD 13P			
CNS2	1-784-031-41	CONNECTOR, BOARD TO BOARD 8P			
CNS3	1-568-439-11	SOCKET, CONNECTOR 7P			
CNS4	1-569-308-11	SOCKET, CONNECTOR (L TYRE) 19P			
CNS7	1-569-060-11	SOCKET, CONNECTOR 11P			
		< DIODE >			
D1001	8-719-016-74	DIODE 1SS352-TPH3			
D1101	8-719-016-74	DIODE 1SS352-TPH3			
D1501	8-719-049-09	DIODE 1SS367-T3SONY			
D1502	8-719-049-09	DIODE 1SS367-T3SONY			
D1601	8-719-016-74	DIODE 1SS352-TPH3			

Ref. No.	Part No.	Description			Remarks
		< FERRITE BEAD >			
FB1101	1-469-727-21	INDUCTOR	0uH		
FB1102	1-469-727-21	INDUCTOR	0uH		
FB1104	1-469-710-21	INDUCTOR	0uH		
FB1105	1-469-710-21	INDUCTOR	0uH		
FB1201	1-469-727-21	INDUCTOR	0uH		
FB1202	1-469-727-21	INDUCTOR	0uH		
FB1203	1-469-710-21	INDUCTOR	0uH		
FB1204	1-469-710-21	INDUCTOR	0uH		
FB1501	1-469-727-21	INDUCTOR	0uH		
FB1502	1-216-864-11	METAL CHIP	0	5%	1/16W
FB1601	1-469-727-21	INDUCTOR	0uH		
FB1602	1-216-864-11	METAL CHIP	0	5%	1/16W
FB1603	1-216-864-11	METAL CHIP	0	5%	1/16W
		< IC >			
IC1101	8-759-825-15	IC LC89056W-E			
IC1102	8-759-242-70	IC TC7WU04F (TE12R)			
IC1104	6-600-014-01	IC TORX141L (OPTICAL VIDEO IN)			
IC1201	8-759-698-76	IC CXD9617R			
IC1202	6-704-037-01	IC IS61LV6416-10TLT			
IC1501	6-705-627-01	IC AK4626VQ			
IC1503	8-759-039-69	IC uPC7805AHF			
IC1601	6-803-873-11	IC MB90478PF-G-170-BNDE1			
IC1602	6-701-680-01	IC PST3629NR			
IC1604	8-759-641-86	IC BR24C16F-E2			
IC1901	6-701-887-02	IC SI-3004KWF			
IC1902	8-759-604-32	IC M5F7810L			
IC1903	8-759-450-47	IC BA05T			
IC1904	8-759-445-59	IC BA033T			
		< JACK >			
J1101	1-778-228-11	JACK, PIN 1P (DVD IN COAXIAL)			
		< JUMPER RESISTOR >			
JR1116	1-216-864-11	METAL CHIP	0	5%	1/16W
JR1200	1-216-864-11	METAL CHIP	0	5%	1/16W
JR1300	1-216-864-11	METAL CHIP	0	5%	1/16W
JR1301	1-216-864-11	METAL CHIP	0	5%	1/16W
JR1600	1-216-864-11	METAL CHIP	0	5%	1/16W
		< COIL >			
L1901	1-216-864-11	METAL CHIP	0	5%	1/16W
		< TRANSISTOR >			
Q1601	8-729-027-43	TRANSISTOR	RT1N141C-TP-1		
Q1602	8-729-230-49	TRANSISTOR	2SC2712-YG-TE85L		
		< RESISTOR >			
R1100	1-216-857-11	METAL CHIP	1M	5%	1/16W
R1101	1-216-833-11	METAL CHIP	10K	5%	1/16W
R1102	1-216-833-11	METAL CHIP	10K	5%	1/16W
R1103	1-216-809-11	METAL CHIP	100	5%	1/16W
R1104	1-216-809-11	METAL CHIP	100	5%	1/16W
R1105	1-216-829-11	METAL CHIP	4.7K	5%	1/16W
R1106	1-216-839-11	METAL CHIP	33K	5%	1/16W
R1107	1-216-830-11	METAL CHIP	5.6K	5%	1/16W
R1108	1-216-809-11	METAL CHIP	100	5%	1/16W
R1109	1-216-809-11	METAL CHIP	100	5%	1/16W

Ref. No.	Part No.	Description			Remarks
R1110	1-216-821-11	METAL CHIP	1K	5%	1/16W
R1111	1-216-821-11	METAL CHIP	1K	5%	1/16W
R1112	1-216-809-11	METAL CHIP	100	5%	1/16W
R1113	1-216-821-11	METAL CHIP	1K	5%	1/16W
R1114	1-216-809-11	METAL CHIP	100	5%	1/16W
R1115	1-216-833-11	METAL CHIP	10K	5%	1/16W
R1116	1-218-285-11	METAL CHIP	75	5%	1/10W
R1117	1-216-821-11	METAL CHIP	1K	5%	1/16W
R1118	1-216-854-11	METAL CHIP	560K	5%	1/16W
R1119	1-216-837-11	METAL CHIP	22K	5%	1/16W
R1120	1-216-809-11	METAL CHIP	100	5%	1/16W
R1122	1-216-833-11	METAL CHIP	10K	5%	1/16W
R1124	1-216-809-11	METAL CHIP	100	5%	1/16W
R1202	1-216-809-11	METAL CHIP	100	5%	1/16W
R1203	1-216-833-11	METAL CHIP	10K	5%	1/16W
R1204	1-216-821-11	METAL CHIP	1K	5%	1/16W
R1205	1-216-809-11	METAL CHIP	100	5%	1/16W
R1206	1-216-809-11	METAL CHIP	100	5%	1/16W
R1207	1-216-809-11	METAL CHIP	100	5%	1/16W
R1208	1-216-809-11	METAL CHIP	100	5%	1/16W
R1209	1-216-809-11	METAL CHIP	100	5%	1/16W
R1210	1-216-833-11	METAL CHIP	10K	5%	1/16W
R1212	1-216-813-11	METAL CHIP	220	5%	1/16W
R1213	1-216-813-11	METAL CHIP	220	5%	1/16W
R1214	1-216-813-11	METAL CHIP	220	5%	1/16W
R1215	1-216-813-11	METAL CHIP	220	5%	1/16W
R1216	1-216-813-11	METAL CHIP	220	5%	1/16W
R1217	1-216-813-11	METAL CHIP	220	5%	1/16W
R1218	1-216-813-11	METAL CHIP	220	5%	1/16W
R1219	1-216-813-11	METAL CHIP	220	5%	1/16W
R1220	1-216-813-11	METAL CHIP	220	5%	1/16W
R1221	1-216-813-11	METAL CHIP	220	5%	1/16W
R1222	1-216-813-11	METAL CHIP	220	5%	1/16W
R1224	1-216-813-11	METAL CHIP	220	5%	1/16W
R1225	1-216-813-11	METAL CHIP	220	5%	1/16W
R1226	1-216-813-11	METAL CHIP	220	5%	1/16W
R1227	1-216-813-11	METAL CHIP	220	5%	1/16W
R1228	1-216-813-11	METAL CHIP	220	5%	1/16W
R1229	1-216-813-11	METAL CHIP	220	5%	1/16W
R1230	1-216-813-11	METAL CHIP	220	5%	1/16W
R1231	1-216-813-11	METAL CHIP	220	5%	1/16W
R1232	1-216-813-11	METAL CHIP	220	5%	1/16W
R1233	1-216-813-11	METAL CHIP	220	5%	1/16W
R1234	1-216-813-11	METAL CHIP	220	5%	1/16W
R1235	1-216-813-11	METAL CHIP	220	5%	1/16W
R1236	1-216-813-11	METAL CHIP	220	5%	1/16W
R1237	1-216-813-11	METAL CHIP	220	5%	1/16W
R1238	1-216-813-11	METAL CHIP	220	5%	1/16W
R1239	1-216-813-11	METAL CHIP	220	5%	1/16W
R1240	1-216-813-11	METAL CHIP	220	5%	1/16W
R1241	1-216-813-11	METAL CHIP	220	5%	1/16W
R1242	1-216-813-11	METAL CHIP	220	5%	1/16W
R1243	1-216-813-11	METAL CHIP	220	5%	1/16W
R1244	1-216-813-11	METAL CHIP	220	5%	1/16W
R1300	1-216-809-11	METAL CHIP	100	5%	1/16W
R1301	1-216-809-11	METAL CHIP	100	5%	1/16W
R1302	1-216-809-11	METAL CHIP	100	5%	1/16W
R1303	1-216-809-11	METAL CHIP	100	5%	1/16W

Ref. No.	Part No.	Description			Remarks
R1304	1-216-809-11	METAL CHIP	100	5%	1/16W
R1305	1-216-841-11	METAL CHIP	47K	5%	1/16W
R1306	1-216-841-11	METAL CHIP	47K	5%	1/16W
R1315	1-216-864-11	METAL CHIP	0	5%	1/16W
R1365	1-216-864-11	METAL CHIP	0	5%	1/16W
R1508	1-216-841-11	METAL CHIP	47K	5%	1/16W
R1509	1-216-821-11	METAL CHIP	1K	5%	1/16W
R1516	1-216-813-11	METAL CHIP	220	5%	1/16W
R1517	1-216-813-11	METAL CHIP	220	5%	1/16W
R1518	1-216-813-11	METAL CHIP	220	5%	1/16W
R1519	1-216-813-11	METAL CHIP	220	5%	1/16W
R1520	1-216-813-11	METAL CHIP	220	5%	1/16W
R1521	1-216-813-11	METAL CHIP	220	5%	1/16W
R1600	1-216-829-11	METAL CHIP	4.7K	5%	1/16W
R1601	1-216-821-11	METAL CHIP	1K	5%	1/16W
R1602	1-216-829-11	METAL CHIP	4.7K	5%	1/16W
R1603	1-216-821-11	METAL CHIP	1K	5%	1/16W
R1604	1-216-809-11	METAL CHIP	100	5%	1/16W
R1605	1-216-809-11	METAL CHIP	100	5%	1/16W
R1606	1-216-821-11	METAL CHIP	1K	5%	1/16W
R1607	1-216-821-11	METAL CHIP	1K	5%	1/16W
R1608	1-216-821-11	METAL CHIP	1K	5%	1/16W
R1609	1-216-821-11	METAL CHIP	1K	5%	1/16W
R1610	1-216-821-11	METAL CHIP	1K	5%	1/16W
R1611	1-216-821-11	METAL CHIP	1K	5%	1/16W
R1612	1-216-821-11	METAL CHIP	1K	5%	1/16W
R1613	1-216-821-11	METAL CHIP	1K	5%	1/16W
R1614	1-216-821-11	METAL CHIP	1K	5%	1/16W
R1615	1-216-821-11	METAL CHIP	1K	5%	1/16W
R1616	1-216-821-11	METAL CHIP	1K	5%	1/16W
R1617	1-216-809-11	METAL CHIP	100	5%	1/16W
R1618	1-216-809-11	METAL CHIP	100	5%	1/16W
R1619	1-216-809-11	METAL CHIP	100	5%	1/16W
R1621	1-216-821-11	METAL CHIP	1K	5%	1/16W
R1624	1-216-833-11	METAL CHIP	10K	5%	1/16W
R1625	1-216-833-11	METAL CHIP	10K	5%	1/16W
R1626	1-216-833-11	METAL CHIP	10K	5%	1/16W
R1627	1-216-833-11	METAL CHIP	10K	5%	1/16W
R1628	1-216-833-11	METAL CHIP	10K	5%	1/16W
R1629	1-216-833-11	METAL CHIP	10K	5%	1/16W
R1630	1-216-833-11	METAL CHIP	10K	5%	1/16W
R1631	1-216-829-11	METAL CHIP	4.7K	5%	1/16W
R1632	1-216-829-11	METAL CHIP	4.7K	5%	1/16W (SP)
R1632	1-216-833-11	METAL CHIP	10K	5%	1/16W (E51)
R1632	1-216-841-11	METAL CHIP	47K	5%	1/16W (MX)
R1632	1-216-864-11	METAL CHIP	0	5%	1/16W (US)
R1635	1-216-833-11	METAL CHIP	10K	5%	1/16W
R1636	1-216-833-11	METAL CHIP	10K	5%	1/16W
R1638	1-216-829-11	METAL CHIP	4.7K	5%	1/16W
R1639	1-216-809-11	METAL CHIP	100	5%	1/16W
R1640	1-216-809-11	METAL CHIP	100	5%	1/16W
R1641	1-216-809-11	METAL CHIP	100	5%	1/16W
R1642	1-216-833-11	METAL CHIP	10K	5%	1/16W
R1643	1-216-821-11	METAL CHIP	1K	5%	1/16W

DIGITAL DISPLAY

Ref. No.	Part No.	Description			Remarks
R1644	1-216-821-11	METAL CHIP	1K	5%	1/16W
R1645	1-216-821-11	METAL CHIP	1K	5%	1/16W
R1646	1-216-821-11	METAL CHIP	1K	5%	1/16W
R1647	1-216-821-11	METAL CHIP	1K	5%	1/16W
R1648	1-216-821-11	METAL CHIP	1K	5%	1/16W
R1649	1-216-821-11	METAL CHIP	1K	5%	1/16W
R1650	1-216-833-11	METAL CHIP	10K	5%	1/16W
R1651	1-216-833-11	METAL CHIP	10K	5%	1/16W
R1652	1-216-833-11	METAL CHIP	10K	5%	1/16W
R1653	1-216-833-11	METAL CHIP	10K	5%	1/16W
R1654	1-216-833-11	METAL CHIP	10K	5%	1/16W
R1655	1-216-833-11	METAL CHIP	10K	5%	1/16W
R1656	1-216-841-11	METAL CHIP	47K	5%	1/16W
R1657	1-216-833-11	METAL CHIP	10K	5%	1/16W
R1658	1-216-809-11	METAL CHIP	100	5%	1/16W
R1660	1-216-833-11	METAL CHIP	10K	5%	1/16W
R1662	1-216-827-11	METAL CHIP	3.3K	5%	1/16W
R1663	1-216-827-11	METAL CHIP	3.3K	5%	1/16W
R1664	1-216-833-11	METAL CHIP	10K	5%	1/16W
R1667	1-216-821-11	METAL CHIP	1K	5%	1/16W
R1668	1-216-833-11	METAL CHIP	10K	5%	1/16W
R1669	1-216-833-11	METAL CHIP	10K	5%	1/16W
R1670	1-216-833-11	METAL CHIP	10K	5%	1/16W
R1671	1-216-864-11	METAL CHIP	0	5%	1/16W
R1673	1-216-833-11	METAL CHIP	10K	5%	1/16W
R1675	1-216-833-11	METAL CHIP	10K	5%	1/16W
R1680	1-216-833-11	METAL CHIP	10K	5%	1/16W
R1681	1-216-833-11	METAL CHIP	10K	5%	1/16W
R1682	1-216-845-11	METAL CHIP	100K	5%	1/16W
R1683	1-216-833-11	METAL CHIP	10K	5%	1/16W
R1684	1-216-833-11	METAL CHIP	10K	5%	1/16W
R1685	1-216-833-11	METAL CHIP	10K	5%	1/16W
R1686	1-216-833-11	METAL CHIP	10K	5%	1/16W
R1687	1-216-833-11	METAL CHIP	10K	5%	1/16W
R1688	1-216-864-11	METAL CHIP	0	5%	1/16W
R1689	1-216-833-11	METAL CHIP	10K	5%	1/16W
R1690	1-216-833-11	METAL CHIP	10K	5%	1/16W
R1694	1-216-821-11	METAL CHIP	1K	5%	1/16W
R1696	1-216-833-11	METAL CHIP	10K	5%	1/16W
R1697	1-216-833-11	METAL CHIP	10K	5%	1/16W
R1698	1-216-829-11	METAL CHIP	4.7K	5%	1/16W
R1699	1-216-829-11	METAL CHIP	4.7K	5%	1/16W
		< VIBRATOR >			
X1101	1-781-465-21	VIBRATOR, CRYSTAL 12.288MHz			
X1201	1-795-363-21	VIBRATOR, CERAMIC 13.5MHz			
X1601	1-767-922-11	VIBRATOR, CERAMIC 16.0MHz			

****

	A-4750-419-A	DISPLAY BOARD, COMPLETE			
		**********			
		< CAPACITOR >			
C100	1-164-159-11	CERAMIC	0.1uF		50V
C101	1-164-159-11	CERAMIC	0.1uF		50V
C105	1-126-795-11	ELECT	10uF	20.00%	50V
C108	1-164-159-11	CERAMIC	0.1uF		50V
C109	1-164-159-11	CERAMIC	0.1uF		50V
C110	1-128-825-11	CERAMIC	2200PF	5%	50V
C111	1-128-809-11	CERAMIC	100PF	5%	50V
C112	1-128-809-11	CERAMIC	100PF	5%	50V
C114	1-164-159-11	CERAMIC	0.1uF		50V
C115	1-126-795-11	ELECT	10uF	20.00%	50V
C132	1-128-813-11	CERAMIC	220PF	5%	50V
C133	1-128-813-11	CERAMIC	220PF	5%	50V
C134	1-128-813-11	CERAMIC	220PF	5%	50V
C135	1-128-813-11	CERAMIC	220PF	5%	50V
C136	1-128-813-11	CERAMIC	220PF	5%	50V
C137	1-128-813-11	CERAMIC	220PF	5%	50V
C138	1-128-813-11	CERAMIC	220PF	5%	50V
C139	1-128-813-11	CERAMIC	220PF	5%	50V
C140	1-128-813-11	CERAMIC	220PF	5%	50V
C141	1-128-813-11	CERAMIC	220PF	5%	50V
C142	1-128-813-11	CERAMIC	220PF	5%	50V
C143	1-128-813-11	CERAMIC	220PF	5%	50V
C144	1-164-159-11	CERAMIC	0.1uF		50V
C150	1-164-159-11	CERAMIC	0.1uF		50V
C151	1-126-795-11	ELECT	10uF	20.00%	50V
C152	1-128-813-11	CERAMIC	220PF	5%	50V
C153	1-128-813-11	CERAMIC	220PF	5%	50V
C154	1-128-813-11	CERAMIC	220PF	5%	50V
C155	1-164-159-11	CERAMIC	0.1uF		50V
C156	1-164-159-11	CERAMIC	0.1uF		50V
C157	1-164-159-11	CERAMIC	0.1uF		50V
		< CONNECTOR >			
* CNP101	1-564-518-11	PLUG, CONNECTOR 3P			
* CNP103	1-564-517-11	PLUG, CONNECTOR 2P			
		< CONNECTOR >			
CNS100	1-569-323-11	SOCKET, CONNECTOR 19P			
		< DIODE >			
D102	8-719-061-96	DIODE SLR-325DCT31 (2CH)			
D103	8-719-061-96	DIODE SLR-325DCT31 (MUSIC)			
D104	8-719-061-96	DIODE SLR-325DCT31 (MOVIE)			
D105	8-719-061-96	DIODE SLR-325DCT31 (A.F.D.)			
		< IC >			
IC100	8-759-643-83	IC PT6315			
IC101	8-759-243-51	IC TC74ACT08P			
IC102	6-600-309-01	IC RPM7240-H9 (R)			
		< RESISTOR >			
R101	1-247-831-91	CARBON	1K	5%	1/4W
R102	1-249-421-11	CARBON	2.2K	5%	1/4W F
R103	1-249-421-11	CARBON	2.2K	5%	1/4W F
R104	1-247-847-91	CARBON	4.7K	5%	1/4W
R105	1-249-429-11	CARBON	10K	5%	1/4W
R111	1-247-831-91	CARBON	1K	5%	1/4W
R112	1-249-421-11	CARBON	2.2K	5%	1/4W F
R113	1-249-421-11	CARBON	2.2K	5%	1/4W F
R114	1-247-847-91	CARBON	4.7K	5%	1/4W
R115	1-249-429-11	CARBON	10K	5%	1/4W

DISPLAY | HEADPHONE | MAIN

Ref. No.	Part No.	Description			Remarks
R121	1-247-831-91	CARBON	1K	5%	1/4W
R122	1-249-421-11	CARBON	2.2K	5%	1/4W F
R123	1-249-421-11	CARBON	2.2K	5%	1/4W F
R150	1-249-440-11	CARBON	82K	5%	1/4W
R153	1-247-807-31	CARBON	100	5%	1/4W
⚠R154	1-249-393-11	CARBON	10	5%	1/4W F
R161	1-249-409-11	CARBON	220	5%	1/4W F
⚠R175	1-249-393-11	CARBON	10	5%	1/4W F
⚠R198	1-249-381-11	CARBON	1	5%	1/4W F
⚠R199	1-249-381-11	CARBON	1	5%	1/4W F
		< VARIABLE RESISTOR >			
RV102	1-418-725-41	ENCODER, ROTARY (12 TYPE) (MASTER VOLUME)			
		< SWITCH >			
S100	1-771-410-21	SWITCH, TACTILE (INPUT MODE)			
S101	1-771-410-21	SWITCH, TACTILE (>)			
S102	1-771-410-21	SWITCH, TACTILE (-)			
S103	1-771-410-21	SWITCH, TACTILE (+)			
S104	1-771-410-21	SWITCH, TACTILE (<)			
S108	1-771-410-21	SWITCH, TACTILE (AM)			
S110	1-771-410-21	SWITCH, TACTILE (MUSIC)			
S111	1-771-410-21	SWITCH, TACTILE (MOVIE)			
S112	1-771-410-21	SWITCH, TACTILE (A.F.D.)			
S113	1-771-410-21	SWITCH, TACTILE (2CH)			
S114	1-771-410-21	SWITCH, TACTILE (ENTER)			
S115	1-771-410-21	SWITCH, TACTILE (MAIN MENU)			
S126	1-771-410-21	SWITCH, TACTILE (VIDEO)			
S127	1-771-410-21	SWITCH, TACTILE (DVD)			
S128	1-771-410-21	SWITCH, TACTILE (FM)			

****

HEADPHONE BOARD
****

		< CONNECTOR >			
CNP791	1-691-766-11	PLUG (MICRO CONNECTOR) 4P			
		< JACK >			
J791	1-815-314-21	JACK (PHONES)			

****

	A-4750-415-A	MAIN BOARD, COMPLETE (US) **********			
	A-4752-121-A	MAIN BOARD, COMPLETE (E51, MX, SP) **********			
	7-685-646-79	SCREW +BVTP 3X8 TYPE2 IT-3			
		< CAPACITOR >			
C371	1-161-494-00	CERAMIC	0.022uF		25V
C372	1-161-494-00	CERAMIC	0.022uF		25V
C373	1-161-494-00	CERAMIC	0.022uF		25V
C374	1-164-159-11	CERAMIC	0.1uF		50V
C375	1-161-494-00	CERAMIC	0.022uF		25V
C376	1-161-494-00	CERAMIC	0.022uF		25V
C413	1-126-961-11	ELECT	2.2uF	20.00%	50V
C414	1-126-961-11	ELECT	2.2uF	20.00%	50V
C415	1-126-961-11	ELECT	2.2uF	20.00%	50V
C416	1-126-961-11	ELECT	2.2uF	20.00%	50V
C417	1-126-961-11	ELECT	2.2uF	20.00%	50V
C418	1-126-961-11	ELECT	2.2uF	20.00%	50V
C419	1-126-961-11	ELECT	2.2uF	20.00%	50V
C433	1-126-961-11	ELECT	2.2uF	20.00%	50V
C464	1-164-159-11	CERAMIC	0.1uF		50V
C465	1-126-934-11	ELECT	220uF	20.00%	16V
C467	1-164-159-11	CERAMIC	0.1uF		50V
C475	1-126-964-11	ELECT	10uF	20.00%	50V
C481	1-126-963-11	ELECT	4.7uF	20.00%	50V
C482	1-126-963-11	ELECT	4.7uF	20.00%	50V
C483	1-126-963-11	ELECT	4.7uF	20.00%	50V
C484	1-126-963-11	ELECT	4.7uF	20.00%	50V
C485	1-126-964-11	ELECT	10uF	20.00%	50V
C486	1-126-963-11	ELECT	4.7uF	20.00%	50V
C487	1-126-964-11	ELECT	10uF	20.00%	50V
C488	1-164-159-11	CERAMIC	0.1uF		50V
C489	1-128-809-11	CERAMIC	100PF	5%	50V
C490	1-128-809-11	CERAMIC	100PF	5%	50V
C491	1-126-963-11	ELECT	4.7uF	20.00%	50V
C492	1-126-963-11	ELECT	4.7uF	20.00%	50V
C493	1-126-963-11	ELECT	4.7uF	20.00%	50V
C494	1-126-963-11	ELECT	4.7uF	20.00%	50V
C495	1-126-963-11	ELECT	4.7uF	20.00%	50V
C496	1-126-963-11	ELECT	4.7uF	20.00%	50V
C497	1-128-809-11	CERAMIC	100PF	5%	50V
C501	1-126-963-11	ELECT	4.7uF	20.00%	50V
C503	1-104-658-91	ELECT	100uF	20.00%	10V
C504	1-107-583-11	CERAMIC	3PF	0.25PF	500V
C505	1-106-359-00	MYLAR	4700PF	5%	200V
C506	1-102-233-00	CERAMIC	33PF	10.00%	500V
C507	1-128-809-11	CERAMIC	100PF	5%	50V
C508	1-128-809-11	CERAMIC	100PF	5%	50V
C510	1-126-947-11	ELECT	47uF	20.00%	25V
C511	1-136-157-00	FILM	0.022uF	5.00%	50V
C516	1-162-815-11	CERAMIC	47PF	5.00%	500V
C517	1-162-815-11	CERAMIC	47PF	5.00%	500V
C519	1-128-813-11	CERAMIC	220PF	5%	50V
C540	1-126-964-11	ELECT	10uF	20.00%	50V
C541	1-127-876-11	CERAMIC	0.01uF	10%	50V
C601	1-126-963-11	ELECT	4.7uF	20.00%	50V
C603	1-104-658-91	ELECT	100uF	20.00%	10V
C604	1-107-583-11	CERAMIC	3PF	0.25PF	500V
C605	1-102-233-00	CERAMIC	33PF	10.00%	500V
C606	1-128-813-11	CERAMIC	220PF	5%	50V
C607	1-128-809-11	CERAMIC	100PF	5%	50V
C610	1-126-947-11	ELECT	47uF	20.00%	25V
C611	1-136-157-00	FILM	0.022uF	5.00%	50V
C619	1-128-813-11	CERAMIC	220PF	5%	50V
C620	1-162-815-11	CERAMIC	47PF	5.00%	500V
C621	1-162-815-11	CERAMIC	47PF	5.00%	500V
C640	1-126-964-11	ELECT	10uF	20.00%	50V
C642	1-127-876-11	CERAMIC	0.01uF	10%	50V
C643	1-128-579-11	ELECT	2.2uF	20.00%	100V

The components identified by mark ⚠ or dotted line with mark ⚠ are critical for safety.
Replace only with part number specified.

MAIN

Ref. No.	Part No.	Description			Remarks
C651	1-126-963-11	ELECT	4.7uF	20.00%	50V
C653	1-104-658-91	ELECT	100uF	20.00%	10V
C654	1-107-583-11	CERAMIC	3PF	0.25PF	500V
C655	1-102-233-00	CERAMIC	33PF	10.00%	500V
C656	1-128-813-11	CERAMIC	220PF	5%	50V
C657	1-128-809-11	CERAMIC	100PF	5%	50V
C660	1-126-947-11	ELECT	47uF	20.00%	25V
C661	1-136-157-00	FILM	0.022uF	5.00%	50V
C666	1-162-815-11	CERAMIC	47PF	5.00%	500V
C669	1-162-815-11	CERAMIC	47PF	5.00%	500V
C670	1-128-813-11	CERAMIC	220PF	5%	50V
C680	1-126-964-11	ELECT	10uF	20.00%	50V
C681	1-127-876-11	CERAMIC	0.01uF	10%	50V
C691	1-164-159-11	CERAMIC	0.1uF		50V
C700	1-128-825-11	CERAMIC	2200PF	5%	50V
C701	1-126-963-11	ELECT	4.7uF	20.00%	50V
C703	1-104-658-91	ELECT	100uF	20.00%	10V
C704	1-107-583-11	CERAMIC	3PF	0.25PF	500V
C705	1-102-233-00	CERAMIC	33PF	10.00%	500V
C706	1-128-813-11	CERAMIC	220PF	5%	50V
C707	1-128-809-11	CERAMIC	100PF	5%	50V
C710	1-126-947-11	ELECT	47uF	20.00%	25V
C711	1-136-157-00	FILM	0.022uF	5.00%	50V
C716	1-162-815-11	CERAMIC	47PF	5.00%	500V
C717	1-162-815-11	CERAMIC	47PF	5.00%	500V
C720	1-128-813-11	CERAMIC	220PF	5%	50V
C721	1-126-934-11	ELECT	220uF	20.00%	16V
C722	1-126-964-11	ELECT	10uF	20.00%	50V
C732	1-128-582-11	ELECT	10uF	20.00%	100V
C733	1-128-582-11	ELECT	10uF	20.00%	100V
C740	1-126-964-11	ELECT	10uF	20.00%	50V
C742	1-127-876-11	CERAMIC	0.01uF	10%	50V
C744	1-128-579-11	ELECT	2.2uF	20.00%	100V
C750	1-126-964-11	ELECT	10uF	20.00%	50V
C751	1-126-963-11	ELECT	4.7uF	20.00%	50V
C752	1-127-876-11	CERAMIC	0.01uF	10%	50V
C753	1-104-658-91	ELECT	100uF	20.00%	10V
C754	1-107-583-11	CERAMIC	3PF	0.25PF	500V
C755	1-102-233-00	CERAMIC	33PF	10.00%	500V
C756	1-128-813-11	CERAMIC	220PF	5%	50V
C757	1-128-809-11	CERAMIC	100PF	5%	50V
C760	1-126-947-11	ELECT	47uF	20.00%	25V
C761	1-136-157-00	FILM	0.022uF	5.00%	50V
C766	1-162-815-11	CERAMIC	47PF	5.00%	500V
C767	1-162-815-11	CERAMIC	47PF	5.00%	500V
C770	1-128-813-11	CERAMIC	220PF	5%	50V
C803	1-165-498-11	ELECT	4700uF	20%	63V
C804	1-165-498-11	ELECT	4700uF	20%	63V
C805	1-136-497-81	FILM	0.1uF	5.00%	50V
C806	1-136-497-81	FILM	0.1uF	5.00%	50V
C807	1-104-658-91	ELECT	100uF	20.00%	10V
C808	1-126-925-91	ELECT	470uF	20.00%	10V
C810	1-164-159-11	CERAMIC	0.1uF		50V
C811	1-164-159-11	CERAMIC	0.1uF		50V
C900	1-161-494-00	CERAMIC	0.022uF		25V (E51, MX, SP)

Ref. No.	Part No.	Description	Remarks
		< CONNECTOR >	
CNP501	1-573-845-11	CONNECTOR, BOARD TO BOARD 13P	
* CNP502	1-774-876-21	CONNECTOR, BOARD TO BOARD 8P	
CNP561	1-784-922-11	PIN, CONNECTOR 5P	
CNP562	1-691-768-11	PLUG (MICRO CONNECTOR) 6P	
* CNP801	1-564-104-00	PIN, CONNECTOR (3.96mm PITCH) 3P	
CNP911	1-784-924-11	PIN, CONNECTOR 8P	
CNP915	1-793-674-21	CONNECTOR, BOARD TO BOARD 7P	
		< DIODE >	
D505	8-719-991-33	DIODE 1SS133T-72	
D510	8-719-991-33	DIODE 1SS133T-72	
D540	8-719-991-33	DIODE 1SS133T-72	
D605	8-719-991-33	DIODE 1SS133T-72	
D610	8-719-991-33	DIODE 1SS133T-72	
D640	8-719-991-33	DIODE 1SS133T-72	
D665	8-719-991-33	DIODE 1SS133T-72	
D680	8-719-991-33	DIODE 1SS133T-72	
D690	8-719-934-21	DIODE HZS30-1LTA	
D691	8-719-991-33	DIODE 1SS133T-72	
D705	8-719-991-33	DIODE 1SS133T-72	
D710	8-719-991-33	DIODE 1SS133T-72	
D721	8-719-991-33	DIODE 1SS133T-72	
D722	8-719-991-33	DIODE 1SS133T-72	
D731	8-719-991-33	DIODE 1SS133T-72	
D732	8-719-991-33	DIODE 1SS133T-72	
D733	8-719-991-33	DIODE 1SS133T-72	
D734	8-719-991-33	DIODE 1SS133T-72	
D740	8-719-991-33	DIODE 1SS133T-72	
D750	8-719-991-33	DIODE 1SS133T-72	
D765	8-719-991-33	DIODE 1SS133T-72	
D791	8-719-991-33	DIODE 1SS133T-72	
D802	8-719-072-05	DIODE RBV-602LF-A	
D851	8-719-991-33	DIODE 1SS133T-72	
D896	8-719-043-76	DIODE AK04V1	
		< IC >	
IC201	6-703-501-01	IC M61527FP	
IC501	8-749-011-16	IC STK350-230	
IC601	8-759-167-88	IC NJM4565D	
IC701	6-700-943-01	IC uPC2581V-S	
IC702	6-700-943-01	IC uPC2581V-S	
IC801	8-759-605-00	IC M5F78M07L	
IC802	8-759-604-95	IC M5F79M07L	
		< JACK >	
J403	1-794-981-11	JACK, PIN 4P (DVD/VIDEO)	
		< COIL >	
L521	1-420-872-52	COIL, AIR-CORE	
L601	1-420-872-52	COIL, AIR-CORE	
L651	1-420-872-52	COIL, AIR-CORE	
L701	1-420-872-52	COIL, AIR-CORE	
L751	1-420-872-52	COIL, AIR-CORE	

MAIN

Ref. No.	Part No.	Description				Remarks
		< TRANSISTOR >				
Q361	8-729-823-22	TRANSISTOR	2SC3576-AC			
Q362	8-729-823-22	TRANSISTOR	2SC3576-AC			
Q363	8-729-823-22	TRANSISTOR	2SC3576-AC			
Q364	8-729-823-22	TRANSISTOR	2SC3576-AC			
Q365	8-729-823-22	TRANSISTOR	2SC3576-AC			
Q366	8-729-823-22	TRANSISTOR	2SC3576-AC			
Q379	8-729-900-63	TRANSISTOR	BN1F4M-TP			
Q471	8-729-823-22	TRANSISTOR	2SC3576-AC			
Q501	8-729-119-76	TRANSISTOR	2SA1115TP-EF			
Q502	8-729-141-30	TRANSISTOR	2SC3623ATP-LK			
Q505	8-729-140-82	TRANSISTOR	2SA988TP-PAFAEA			
Q506	8-729-140-82	TRANSISTOR	2SA988TP-PAFAEA			
Q540	8-729-281-53	TRANSISTOR	2SC1815GR-TPE2			
Q550	8-729-119-79	TRANSISTOR	2SC2785TP-FEK			
Q601	8-729-119-76	TRANSISTOR	2SA1115TP-EF			
Q602	8-729-141-30	TRANSISTOR	2SC3623ATP-LK			
Q605	8-729-140-82	TRANSISTOR	2SA988TP-PAFAEA			
Q606	8-729-140-82	TRANSISTOR	2SA988TP-PAFAEA			
Q610	8-729-119-79	TRANSISTOR	2SC2785TP-FEK			
Q640	8-729-281-53	TRANSISTOR	2SC1815GR-TPE2			
Q651	8-729-119-76	TRANSISTOR	2SA1115TP-EF			
Q652	8-729-141-30	TRANSISTOR	2SC3623ATP-LK			
Q655	8-729-140-82	TRANSISTOR	2SA988TP-PAFAEA			
Q656	8-729-140-82	TRANSISTOR	2SA988TP-PAFAEA			
Q680	8-729-281-53	TRANSISTOR	2SC1815GR-TPE2			
Q691	8-729-281-53	TRANSISTOR	2SC1815GR-TPE2			
Q692	8-729-900-63	TRANSISTOR	BN1F4M-TP			
Q701	8-729-119-76	TRANSISTOR	2SA1115TP-EF			
Q702	8-729-141-30	TRANSISTOR	2SC3623ATP-LK			
Q705	8-729-140-82	TRANSISTOR	2SA988TP-PAFAEA			
Q706	8-729-140-82	TRANSISTOR	2SA988TP-PAFAEA			
Q710	8-729-119-79	TRANSISTOR	2SC2785TP-FEK			
Q722	8-729-140-84	TRANSISTOR	2SC1841TP-PAFAEA			
Q723	8-729-119-79	TRANSISTOR	2SC2785TP-FEK			
Q725	8-729-140-82	TRANSISTOR	2SA988TP-PAFAEA			
Q740	8-729-281-53	TRANSISTOR	2SC1815GR-TPE2			
Q750	8-729-281-53	TRANSISTOR	2SC1815GR-TPE2			
Q751	8-729-119-76	TRANSISTOR	2SA1115TP-EF			
Q752	8-729-141-30	TRANSISTOR	2SC3623ATP-LK			
Q755	8-729-140-82	TRANSISTOR	2SA988TP-PAFAEA			
Q756	8-729-140-82	TRANSISTOR	2SA988TP-PAFAEA			
Q790	8-729-119-79	TRANSISTOR	2SC2785TP-FEK			
Q851	8-729-119-79	TRANSISTOR	2SC2785TP-FEK			
		< RESISTOR >				
R360	1-247-879-91	CARBON	100K	5%	1/4W	
R361	1-247-847-91	CARBON	4.7K	5%	1/4W	
R362	1-247-847-91	CARBON	4.7K	5%	1/4W	
R363	1-247-879-91	CARBON	100K	5%	1/4W	
R366	1-249-429-11	CARBON	10K	5%	1/4W	
R367	1-247-879-91	CARBON	100K	5%	1/4W	
R368	1-247-871-91	CARBON	47K	5%	1/4W	
R369	1-247-847-91	CARBON	4.7K	5%	1/4W	
R370	1-247-847-91	CARBON	4.7K	5%	1/4W	
R371	1-247-879-91	CARBON	100K	5%	1/4W	

Ref. No.	Part No.	Description				Remarks
R372	1-247-879-91	CARBON	100K	5%	1/4W	
R373	1-247-831-91	CARBON	1K	5%	1/4W	
R374	1-247-831-91	CARBON	1K	5%	1/4W	
R375	1-247-831-91	CARBON	1K	5%	1/4W	
R376	1-247-831-91	CARBON	1K	5%	1/4W	
R377	1-247-831-91	CARBON	1K	5%	1/4W	
R378	1-247-831-91	CARBON	1K	5%	1/4W	
R379	1-247-847-91	CARBON	4.7K	5%	1/4W	
R380	1-247-879-91	CARBON	100K	5%	1/4W	
R381	1-249-429-11	CARBON	10K	5%	1/4W	
R405	1-247-831-91	CARBON	1K	5%	1/4W	
R407	1-247-831-91	CARBON	1K	5%	1/4W	
R410	1-247-871-91	CARBON	47K	5%	1/4W	
R430	1-247-871-91	CARBON	47K	5%	1/4W	
R455	1-247-831-91	CARBON	1K	5%	1/4W	
R457	1-247-831-91	CARBON	1K	5%	1/4W	
R471	1-249-415-11	CARBON	680	5%	1/4W	F
R472	1-247-831-91	CARBON	1K	5%	1/4W	
R475	1-249-421-11	CARBON	2.2K	5%	1/4W	F
R476	1-247-807-31	CARBON	100	5%	1/4W	
R477	1-247-807-31	CARBON	100	5%	1/4W	
R478	1-247-807-31	CARBON	100	5%	1/4W	
R479	1-249-421-11	CARBON	2.2K	5%	1/4W	F
R501	1-247-831-91	CARBON	1K	5%	1/4W	
R502	1-249-439-11	CARBON	68K	5%	1/4W	
R503	1-249-422-11	CARBON	2.7K	5%	1/4W	F
R504	1-249-411-11	CARBON	330	5%	1/4W	
R505	1-249-439-11	CARBON	68K	5%	1/4W	
R510	1-249-421-11	CARBON	2.2K	5%	1/4W	F
R511	1-249-440-11	CARBON	82K	5%	1/4W	
R513	1-249-414-11	CARBON	560	5%	1/4W	F
⚠R514	1-249-405-11	CARBON	100	5%	1/4W	F
⚠R515	1-249-405-11	CARBON	100	5%	1/4W	F
⚠R516	1-234-182-11	ENCAPSULATED COMPONENT				
⚠R517	1-249-393-11	CARBON	10	5%	1/4W	F
R520	1-247-847-91	CARBON	4.7K	5%	1/4W	
R521	1-247-850-11	CARBON	6.2K	5%	1/4W	
R522	1-249-419-11	CARBON	1.5K	5%	1/4W	F
R524	1-249-431-11	CARBON	15K	5%	1/4W	
R525	1-249-439-11	CARBON	68K	5%	1/4W	
⚠R528	1-249-389-11	CARBON	4.7	5%	1/4W	F
R531	1-247-847-91	CARBON	4.7K	5%	1/4W	
⚠R534	1-249-404-00	CARBON	82	5%	1/4W	F
R540	1-247-863-91	CARBON	22K	5%	1/4W	
R546	1-247-843-11	CARBON	3.3K	5%	1/4W	
R555	1-247-863-91	CARBON	22K	5%	1/4W	
R556	1-247-863-91	CARBON	22K	5%	1/4W	
R557	1-249-431-11	CARBON	15K	5%	1/4W	
R573	1-247-871-91	CARBON	47K	5%	1/4W	
R601	1-247-831-91	CARBON	1K	5%	1/4W	
R602	1-249-439-11	CARBON	68K	5%	1/4W	
R603	1-249-422-11	CARBON	2.7K	5%	1/4W	F
R604	1-249-439-11	CARBON	68K	5%	1/4W	
R610	1-249-421-11	CARBON	2.2K	5%	1/4W	F
R611	1-249-440-11	CARBON	82K	5%	1/4W	

The components identified by mark ⚠ or dotted line with mark ⚠ are critical for safety.
Replace only with part number specified.

MAIN

Ref. No.	Part No.	Description			Remarks
R613	1-249-414-11	CARBON	560	5%	1/4W F
⚠R614	1-249-405-11	CARBON	100	5%	1/4W F
⚠R615	1-249-405-11	CARBON	100	5%	1/4W F
⚠R616	1-234-182-11	ENCAPSULATED COMPONENT			
R617	1-249-393-11	CARBON	10	5%	1/4W F
R618	1-249-389-11	CARBON	4.7	5%	1/4W F
R620	1-247-847-91	CARBON	4.7K	5%	1/4W
R621	1-247-850-11	CARBON	6.2K	5%	1/4W
R622	1-249-419-11	CARBON	1.5K	5%	1/4W F
R623	1-247-871-91	CARBON	47K	5%	1/4W
R624	1-249-431-11	CARBON	15K	5%	1/4W
R625	1-249-439-11	CARBON	68K	5%	1/4W
R631	1-247-847-91	CARBON	4.7K	5%	1/4W
⚠R634	1-249-404-00	CARBON	82	5%	1/4W F
R638	1-249-439-11	CARBON	68K	5%	1/4W
R640	1-247-863-91	CARBON	22K	5%	1/4W
R643	1-247-863-91	CARBON	22K	5%	1/4W
R648	1-247-843-11	CARBON	3.3K	5%	1/4W
R651	1-247-831-91	CARBON	1K	5%	1/4W
R652	1-249-439-11	CARBON	68K	5%	1/4W
R653	1-249-422-11	CARBON	2.7K	5%	1/4W F
R654	1-249-439-11	CARBON	68K	5%	1/4W
R655	1-247-863-91	CARBON	22K	5%	1/4W
R656	1-247-863-91	CARBON	22K	5%	1/4W
R657	1-249-431-11	CARBON	15K	5%	1/4W
R660	1-249-421-11	CARBON	2.2K	5%	1/4W F
R661	1-249-440-11	CARBON	82K	5%	1/4W
R663	1-249-414-11	CARBON	560	5%	1/4W F
⚠R664	1-249-405-11	CARBON	100	5%	1/4W F
⚠R665	1-249-405-11	CARBON	100	5%	1/4W F
⚠R666	1-234-182-11	ENCAPSULATED COMPONENT			
⚠R667	1-249-393-11	CARBON	10	5%	1/4W F
⚠R668	1-249-389-11	CARBON	4.7	5%	1/4W F
R669	1-247-847-91	CARBON	4.7K	5%	1/4W
R671	1-247-850-11	CARBON	6.2K	5%	1/4W
R672	1-249-419-11	CARBON	1.5K	5%	1/4W F
R673	1-247-871-91	CARBON	47K	5%	1/4W
R674	1-249-431-11	CARBON	15K	5%	1/4W
R675	1-247-863-91	CARBON	22K	5%	1/4W
R676	1-247-863-91	CARBON	22K	5%	1/4W
R677	1-249-431-11	CARBON	15K	5%	1/4W
R680	1-247-863-91	CARBON	22K	5%	1/4W
R681	1-247-843-11	CARBON	3.3K	5%	1/4W
R690	1-247-887-00	CARBON	220K	5%	1/4W
R691	1-216-452-11	METAL OXIDE	180	5%	2W
R692	1-215-888-00	METAL OXIDE	220	5%	2W (E51, MX, SP)
R692	1-215-889-00	METAL OXIDE	330	5%	2W (US)
R693	1-249-429-11	CARBON	10K	5%	1/4W
R694	1-249-429-11	CARBON	10K	5%	1/4W
R695	1-249-429-11	CARBON	10K	5%	1/4W
R696	1-249-435-11	CARBON	33K	5%	1/4W
R698	1-249-429-11	CARBON	10K	5%	1/4W
R699	1-247-895-00	CARBON	470K	5%	1/4W
R701	1-247-831-91	CARBON	1K	5%	1/4W
R702	1-249-439-11	CARBON	68K	5%	1/4W
R703	1-249-422-11	CARBON	2.7K	5%	1/4W F
R704	1-249-439-11	CARBON	68K	5%	1/4W

Ref. No.	Part No.	Description			Remarks
R710	1-249-421-11	CARBON	2.2K	5%	1/4W F
R711	1-249-440-11	CARBON	82K	5%	1/4W
R713	1-249-414-11	CARBON	560	5%	1/4W F
⚠R714	1-249-405-11	CARBON	100	5%	1/4W F
⚠R715	1-249-405-11	CARBON	100	5%	1/4W F
⚠R716	1-234-182-11	ENCAPSULATED COMPONENT			
⚠R717	1-249-393-11	CARBON	10	5%	1/4W F
⚠R718	1-249-389-11	CARBON	4.7	5%	1/4W F
R719	1-247-847-91	CARBON	4.7K	5%	1/4W
R721	1-247-850-11	CARBON	6.2K	5%	1/4W
R722	1-249-419-11	CARBON	1.5K	5%	1/4W F
R723	1-247-871-91	CARBON	47K	5%	1/4W
R724	1-249-431-11	CARBON	15K	5%	1/4W
R725	1-249-439-11	CARBON	68K	5%	1/4W
R731	1-247-847-91	CARBON	4.7K	5%	1/4W
⚠R732	1-249-381-11	CARBON	1	5%	1/4W F
⚠R733	1-249-381-11	CARBON	1	5%	1/4W F
⚠R734	1-249-404-00	CARBON	82	5%	1/4W F
R735	1-249-427-11	CARBON	6.8K	5%	1/4W F
R736	1-247-831-91	CARBON	1K	5%	1/4W
R737	1-249-436-11	CARBON	39K	5%	1/4W
R740	1-247-863-91	CARBON	22K	5%	1/4W
R744	1-247-863-91	CARBON	22K	5%	1/4W
R745	1-247-863-91	CARBON	22K	5%	1/4W
R746	1-247-863-91	CARBON	22K	5%	1/4W
R747	1-249-431-11	CARBON	15K	5%	1/4W
R748	1-247-843-11	CARBON	3.3K	5%	1/4W
R750	1-247-863-91	CARBON	22K	5%	1/4W
R751	1-247-831-91	CARBON	1K	5%	1/4W
R752	1-249-439-11	CARBON	68K	5%	1/4W
R753	1-249-422-11	CARBON	2.7K	5%	1/4W F
R754	1-249-439-11	CARBON	68K	5%	1/4W
R755	1-247-863-91	CARBON	22K	5%	1/4W
R756	1-247-863-91	CARBON	22K	5%	1/4W
R757	1-249-431-11	CARBON	15K	5%	1/4W
R758	1-247-843-11	CARBON	3.3K	5%	1/4W
R760	1-249-421-11	CARBON	2.2K	5%	1/4W F
R761	1-249-440-11	CARBON	82K	5%	1/4W
R763	1-249-414-11	CARBON	560	5%	1/4W F
⚠R764	1-249-405-11	CARBON	100	5%	1/4W F
⚠R765	1-249-405-11	CARBON	100	5%	1/4W F
⚠R766	1-234-182-11	ENCAPSULATED COMPONENT			
⚠R767	1-249-393-11	CARBON	10	5%	1/4W F
⚠R768	1-249-389-11	CARBON	4.7	5%	1/4W F
R769	1-247-847-91	CARBON	4.7K	5%	1/4W
R770	1-247-871-91	CARBON	47K	5%	1/4W
R771	1-247-850-11	CARBON	6.2K	5%	1/4W
R772	1-249-419-11	CARBON	1.5K	5%	1/4W F
R773	1-247-871-91	CARBON	47K	5%	1/4W
R775	1-249-439-11	CARBON	68K	5%	1/4W
R778	1-249-431-11	CARBON	15K	5%	1/4W
R780	1-249-429-11	CARBON	10K	5%	1/4W
R791	1-247-847-91	CARBON	4.7K	5%	1/4W
R792	1-215-868-00	METAL OXIDE	680	5%	1W
⚠R793	1-249-404-00	CARBON	82	5%	1/4W F

The components identified by mark ⚠ or dotted line with mark ⚠ are critical for safety.
Replace only with part number specified.

MAIN POWER STANDBY

Ref. No.	Part No.	Description			Remarks
R794	1-215-868-00	METAL OXIDE	680	5%	1W
⚠R803	1-249-389-11	CARBON	4.7	5%	1/4W F
⚠R851	1-249-404-00	CARBON	82	5%	1/4W F
R852	1-247-847-91	CARBON	4.7K	5%	1/4W
		< RELAY >			
RY501	1-755-170-11	RELAY (12V)			
RY601	1-755-170-11	RELAY (12V)			
RY701	1-755-170-11	RELAY (12V)			
RY791	1-755-170-11	RELAY (12V)			
RY851	1-755-170-11	RELAY (12V)			
		< TERMINAL >			
TM601	1-694-805-11	TERMINAL BOARD (SUB WOOFER/SURROUND)			
TM602	1-694-805-11	TERMINAL BOARD (CENTER/FRONT)			

****

	1-861-045-11	POWER BOARD			
		**********			
		< RESISTOR >			
R124	1-247-847-91	CARBON	4.7K	5%	1/4W
		< SWITCH >			
S122	1-771-410-21	SWITCH, TACTILE (DIMMER)			
S123	1-771-410-21	SWITCH, TACTILE (DISPLAY)			
S152	1-771-410-21	SWITCH, TACTILE (I/⏻)			

****

	A-4750-409-A	STANDBY BOARD, COMPLETE (SP)			
		**********			
	A-4750-423-A	STANDBY BOARD, COMPLETE (E51)			
		**********			
	A-4750-427-A	STANDBY BOARD, COMPLETE (MX)			
		**********			
	A-4750-608-A	STANDBY BOARD, COMPLETE (US)			
		**********			
		< CAPACITOR >			
C801	1-126-947-11	ELECT	47uF	20.00%	35V
C802	1-126-947-11	ELECT	47uF	20.00%	35V
C813	1-164-159-11	CERAMIC	0.1uF		50V
C814	1-164-159-11	CERAMIC	0.1uF		50V
C815	1-126-943-11	ELECT	2200uF	20.00%	25V
C816	1-126-942-61	ELECT	1000uF	20.00%	25V
C820	1-164-159-11	CERAMIC	0.1uF		50V
C821	1-164-159-11	CERAMIC	0.1uF		50V
C822	1-126-947-11	ELECT	47uF	20.00%	35V
C823	1-126-936-11	ELECT	3300uF	20.00%	16V
C830	1-164-159-11	CERAMIC	0.1uF		50V
C831	1-164-159-11	CERAMIC	0.1uF		50V
C920	1-164-159-11	CERAMIC	0.1uF		50V
C921	1-164-159-11	CERAMIC	0.1uF		50V
C923	1-126-959-11	ELECT	0.47uF	20.00%	50V
C950	1-126-936-11	ELECT	3300uF	20.00%	16V

Ref. No.	Part No.	Description			Remarks
		< CONNECTOR >			
CNP802	1-779-977-11	PIN, CONNECTOR 6P			
CNP804	1-691-767-11	PLUG (MICRO CONNECTOR) 5P			
CNP901	1-564-321-00	PIN, CONNECTOR (3.96mm PITCH) 2P			
* CNP902	1-565-792-11	PIN, CONNECTOR (3.96mm PITCH) 2P			
CNP903	1-564-506-11	PLUG, CONNECTOR 3P			
CNP905	1-793-673-11	CONNECTOR, BOARD TO BOARD 7P			
CNP912	1-779-978-11	PIN, CONNECTOR 3P			
		< DIODE >			
D801	8-719-933-95	DIODE HZS20-1LTA (E51, MX)			
D801	8-719-934-21	DIODE HZS30-1LTA (US, SP)			
D804	8-719-068-28	DIODE HZ6.8BP-TK			
D812	6-500-522-11	DIODE 10EDB40-TA2B5			
D813	6-500-522-11	DIODE 10EDB40-TA2B5			
D814	6-500-522-11	DIODE 10EDB40-TA2B5			
D815	6-500-522-11	DIODE 10EDB40-TA2B5			
D820	6-500-522-11	DIODE 10EDB40-TA2B5			
D821	6-500-522-11	DIODE 10EDB40-TA2B5			
D822	6-500-522-11	DIODE 10EDB40-TA2B5			
D823	6-500-522-11	DIODE 10EDB40-TA2B5			
D901	8-719-991-33	DIODE 1SS133T-72			
D910	6-500-522-11	DIODE 10EDB40-TA2B5			
D911	6-500-522-11	DIODE 10EDB40-TA2B5			
D912	6-500-522-11	DIODE 10EDB40-TA2B5			
D913	6-500-522-11	DIODE 10EDB40-TA2B5			
D914	8-719-991-33	DIODE 1SS133T-72			
D915	8-719-991-33	DIODE 1SS133T-72			
		< FUSE HOLDER >			
FH902	1-533-217-11	FUSE HOLDER			
FH952	1-533-217-11	FUSE HOLDER			
		< EARTH TERMINAL >			
* G901	1-537-738-21	TERMINAL, EARTH (US)			
		< TRANSISTOR >			
Q801	8-729-140-97	TRANSISTOR	2SB734-T-34		
Q901	8-729-119-79	TRANSISTOR	2SC2785TP-FEK		
Q921	8-729-119-79	TRANSISTOR	2SC2785TP-FEK		
		< RESISTOR >			
R804	1-249-426-11	CARBON	5.6K	5%	1/4W (US, E51, SP)
R804	1-249-429-11	CARBON	10K	5%	1/4W (MX)
R806	1-247-863-91	CARBON	22K	5%	1/4W
⚠R810	1-243-634-91	FUSIBLE	0.22	5%	1/2W
⚠R812	1-243-634-91	FUSIBLE	0.22	5%	1/2W
⚠R901	1-219-237-91	SOLID	3.3M	20%	1/2W (US)
R902	1-247-871-91	CARBON	47K	5%	1/4W
R903	1-247-847-91	CARBON	4.7K	5%	1/4W
⚠R904	1-249-381-11	CARBON	1	5%	1/4W F
⚠R910	1-243-635-91	RES, NONFLAMMABLE FUSE	0.33	5%	1/2W

The components identified by mark ⚠ or dotted line with mark ⚠ are critical for safety.
Replace only with part number specified.

STANDBY | SUB WOOFER | TUNING

Ref. No.	Part No.	Description			Remarks
R921	1-247-871-91	CARBON	47K	5%	1/4W
R922	1-249-435-11	CARBON	33K	5%	1/4W
R923	1-249-429-11	CARBON	10K	5%	1/4W
		< RELAY >			
⚠RY901	1-755-276-11	RELAY, POWER			
		< TRANSFORMER >			
⚠T902	1-435-281-11	TRANSFORMER, POWER (US, MX)			
⚠T902	1-435-283-11	TRANSFORMER, POWER (E51)			
⚠T902	1-435-435-11	TRANSFORMER, POWER (SP)			

****

	A-4750-417-A	SUB WOOFER BOARD, COMPLETE			
		**********			
		< CAPACITOR >			
C561	1-126-963-11	ELECT	4.7uF	20.00%	50V
C562	1-128-809-11	CERAMIC	100PF	5%	50V
C563	1-106-359-00	MYLAR	4700PF	5%	200V
C564	1-102-233-00	CERAMIC	33PF	10.00%	500V
C565	1-107-583-11	CERAMIC	3PF	0.25PF	500V
C566	1-104-658-91	ELECT	100uF	20.00%	10V
C571	1-126-947-11	ELECT	47uF	20.00%	25V
C573	1-162-815-11	CERAMIC	47PF	5.00%	500V
C575	1-162-815-11	CERAMIC	47PF	5.00%	500V
C578	1-128-813-11	CERAMIC	220PF	5%	50V
C581	1-136-157-00	FILM	0.022uF	5.00%	50V
C590	1-137-190-91	FILM	0.22uF	5.00%	50V
C592	1-136-175-00	FILM	0.68uF	5.00%	50V
C593	1-136-159-00	FILM	0.033uF	5.00%	50V
C594	1-137-190-91	FILM	0.22uF	5.00%	50V
		< CONNECTOR >			
* CNP505	1-564-104-00	PIN, CONNECTOR (3.96mm PITCH) 3P			
		< DIODE >			
D576	8-719-991-33	DIODE 1SS133T-72			
		< IC >			
IC502	8-759-167-88	IC NJM4565D			
IC503	8-749-011-16	IC STK350-230			
		< COIL >			
L561	1-420-872-52	COIL, AIR-CORE			
		< TRANSISTOR >			
Q575	8-729-140-82	TRANSISTOR	2SA988TP-PAFAEA		
Q576	8-729-140-82	TRANSISTOR	2SA988TP-PAFAEA		
		< RESISTOR >			
R560	1-249-411-11	CARBON	330	5%	1/4W
R561	1-247-831-91	CARBON	1K	5%	1/4W
R562	1-249-439-11	CARBON	68K	5%	1/4W
R565	1-249-439-11	CARBON	68K	5%	1/4W
R566	1-247-831-91	CARBON	1K	5%	1/4W
R567	1-247-863-81	RES, CARBON (SMALL)	22K	5%	1/4W
R568	1-247-863-81	RES, CARBON (SMALL)	22K	5%	1/4W
R571	1-249-428-11	CARBON	8.2K	5%	1/4W F
R572	1-247-847-91	CARBON	4.7K	5%	1/4W
R574	1-247-831-91	CARBON	1K	5%	1/4W
⚠R575	1-249-405-11	CARBON	100	5%	1/4W F
R576	1-247-850-11	CARBON	6.2K	5%	1/4W
R577	1-247-847-91	CARBON	4.7K	5%	1/4W
⚠R578	1-234-182-11	ENCAPSULATED COMPONENT			
R579	1-249-419-11	CARBON	1.5K	5%	1/4W F
R580	1-249-439-11	CARBON	68K	5%	1/4W
⚠R581	1-249-393-11	CARBON	10	5%	1/4W F
⚠R582	1-249-405-11	CARBON	100	5%	1/4W F
R583	1-249-431-11	CARBON	15K	5%	1/4W
R587	1-247-871-91	CARBON	47K	5%	1/4W
⚠R588	1-249-389-11	CARBON	4.7	5%	1/4W F
R591	1-249-426-11	CARBON	5.6K	5%	1/4W
R593	1-247-871-91	CARBON	47K	5%	1/4W
R595	1-249-427-11	CARBON	6.8K	5%	1/4W F
R596	1-249-427-11	CARBON	6.8K	5%	1/4W F
R597	1-247-879-91	CARBON	100K	5%	1/4W

****

	1-861-044-11	TUNING BOARD			
		**********			
R132	1-247-831-91	CARBON	1K	5%	1/4W
R133	1-249-421-11	CARBON	2.2K	5%	1/4W F
R134	1-249-421-11	CARBON	2.2K	5%	1/4W F
R135	1-247-847-91	CARBON	4.7K	5%	1/4W
R136	1-249-429-11	CARBON	10K	5%	1/4W
		< SWITCH >			
S131	1-771-410-21	SWITCH, TACTILE (-(TUNING))			
S132	1-771-410-21	SWITCH, TACTILE (FM MODE)			
S133	1-771-410-21	SWITCH, TACTILE (MEMORY)			
S134	1-771-410-21	SWITCH, TACTILE (–(PRESET TUNING))			
S135	1-771-410-21	SWITCH, TACTILE (+(PRESET TUNING))			
S151	1-771-410-21	SWITCH, TACTILE (+(TUNING))			

****

		MISCELLANEOUS			
		**********			
8	1-773-114-11	WIRE (FLAT TYPE)(19 CORE)			
⚠59	1-777-071-23	CORD, POWER (E51, SP)			
⚠59	1-783-532-11	CORD, POWER (US, MX)			
61	1-769-937-11	WIRE (FLAT TYPE)(11 CORE)			
62	1-575-662-31	WIRE (FLAT TYPE)(5 CORE)			
⚠F901	1-532-464-32	FUSE T2.5AL/250V (E51)			
⚠F901	1-532-503-32	FUSE T1.6AL/250V (SP)			
⚠F901	1-533-452-11	FUSE, GLASS TUBE (DIA. 5) T4.0AL/125V (US, MX)			
Q503	8-749-010-25	IC MN2488-OPY-M			
Q504	8-749-010-26	IC MP1620-OPY-M			
Q572	8-729-026-08	TRANSISTOR 2SC4495			
Q573	8-749-010-25	IC MN2488-OPY-M			
Q574	8-749-010-26	IC MP1620-OPY-M			
Q603	8-749-010-25	IC MN2488-OPY-M			
Q604	8-749-010-26	IC MP1620-OPY-M			
Q653	8-749-010-25	IC MN2488-OPY-M			

The components identified by mark ⚠ or dotted line with mark ⚠ are critical for safety.
Replace only with part number specified.

Ref. No.	Part No.	Description	Remarks
Q653	8-749-010-25	IC MN2488-OPY-M	
Q654	8-749-010-26	IC MP1620-OPY-M	
Q703	8-749-010-25	IC MN2488-OPY-M	
Q704	8-749-010-26	IC MP1620-OPY-M	
Q753	8-749-010-25	IC MN2488-OPY-M	
Q754	8-749-010-26	IC MP1620-OPY-M	
⚠ T901	1-443-185-11	POWER TRANSFORMER (US, MX)	
⚠ T901	1-443-186-11	POWER TRANSFORMER (E51)	
⚠ T901	1-443-211-11	POWER TRANSFORMER (SP)	

The components identified by mark ⚠ or dotted line with mark ⚠ are critical for safety.
Replace only with part number specified.

REVISION HISTORY

Clicking the version allows you to jump to the revised page.
Also, clicking the version at the upper right on the revised page allows you to jump to the next revised page.

Ver.	Date	Description of Revision
1.0	2004.02	New